SPATMAT MANUTENTION

CATALOGUE DE PIÈCES

FD25 Σ SIGMA (CPCD25-X) / FD30 Σ SIGMA (CPCD30-X)
FG25 Σ SIGMA (CPYD25-XL) / FG30 Σ SIGMA (CPYD30-XL)

Siége social
8 rue Jean Walter
92110 CLICHY
Tél : +33(0)1 55 90 58 30

Agence de Nantes (Dépôt central)
583 route de nort sur Erdre
44850 Ligné
Tél : +33 (0)2 28 30 74 70

SARL au capital de 280 150€ - SIRET : 309 214 781 00010

www.spatmat-distribution.com

Thank you for selecting our products.
This parts book collects all of the parts (components) of X series of 3-3.5 ton fork lift trucks. It is convenient for users to identify the description, the structure and the assembling location of the parts replaced or repaired, and to put order on them.
When ordering parts, it is necessary to state the model of the forklift, and the date of manufacture, and the description, specification, quantity and code based on this parts book.
According to users and the development of product, the forklift of our company is improved continuously, therefore the information contained in this book may be updated without notice, users should pay attention to that.
For improving our work, customers are sincerely requested to give us comments and suggestions.

机型含义/Model configuration：

机型号	发动机	变速箱
CPYD20/25/30/35-XH06	PSI2.4LL4	YQXD30-C
CPYD20/25/30/35-XX33	3E22YG51-011A	YQXD30-C

查询方法:

1. 在目录中找到相应的系统或总成;

2. 翻至所标页数,找到该图;

3. 在其图中找出所需零部件,以及它所标注的序号。用户可根据目录中各系统图查找所需的零部件的序号，根据序号可查得相应的图号或者标准号。

本图册中凡各种叉车通用的零件在 目录中不加说明，不通用件除了在目录的左上角表示此系统所适用的车型代号和车型外，还在相应的备注中标注车型代号的区别，如第11页，图9，目录左上角D-H 为车型代号,第2行(序号2)最右端DE表示该零件用于CPYD20/25H06叉车。

4. 根据这个序号,在其后附表中可以查到系统或零件的详细信息.

订购零部件时,务请写清叉车的型号,出厂编号,所需零部件的图号及订购数量。维修时,请使用原厂家提供的零部件,以确保叉车质量.

Indexing Way:

1.Find out the corresponding system or assembly in the content.

2.Turn to the marked page, find out the detail drawing.No noted are all of the same parts and the components otherwise they should br noted in case of difference.

for example, in figure 1, the top left corner in page 11, D-H means the type of the truck. in first line (No.2), D,E means this part is only applied to type of CPYD20/25H06 forklift truck.

3.From the detail drawing, find out the parts and their item numbers.

4.According to the item number, find out detailed information of these parts of the system or assembly from attached table.

When ordering parts or components, please indicate the model,serial number and the ordering quantity of parts or components which you require .

When you replace parts or components, please adopt the ones from original factory to ensure the quality of forklift.

机型号列表/Model list

A	CPYD20XH06				
B	CPYD25XH06				
C	CPYD30XH06				
D	CPYD35XH06				
E	CPCD20XX33				
F	CPCD25XX33				
G	CPCD30XX33				
H	CPCD35XX33				

目录/Contents

系统编号 Item	插图序号 Code	名　称 Name	适合机型 Models	页　码 page
01	图1 Fig.1	发动机总成 Engine assy.	ABEF	1
	图2 Fig.2	发动机总成 Engine assy.	CDGH	3
	图3 Fig.3	空滤器总成 Air filter assy.	ABEF	4
	图4 Fig.4	空滤器总成 Air filter assy.	CDGH	5
	图5 Fig.5	冷却系统 Cooling system	ABEF	6
	图6 Fig.6	冷却系统 Cooling system	CDGH	8
	图7 Fig.7	燃油装置总成 Fuel device assy.	ABCDEFGH	9
	图8 Fig.8	消声器总成 Muffler assy.	ABEF	10
	图9 Fig.9	后处理总成 After-treatment assy.	CDGH	11
02	图10 Fig.10	传动系统 Drive system	ABCDEFGH	12
	图11 Fig.11	变速箱 1 Gearbox 1	ABCDEFGH	14
	图12 Fig.12	变速箱 2 Gearbox 2	ABCDEFGH	17
	图13 Fig.13	液力离合器 Hydraulic Clutch	ABCDEFGH	19
	图14 Fig.14	油泵 Oil pump	ABCDEFGH	21
	图15 Fig.15	盖和控制阀总成 Cover & Control valve assy.	ABCDEFGH	23
	图16 Fig.16	微动阀 Inching valve	ABCDEFGH	25
	图17 Fig.17	差速器 Differential	ABCDEFGH	27
	图18 Fig.18	驱动桥总成(单排) Drive axle assy.(single tire)	ABEF	29
	图19 Fig.19	驱动桥总成(单排) Drive axle assy.(single tire)	CDGH	30
	图20 Fig.20	驱动桥总成(双排) Drive axle assy.(double tire)	ABEF	31
	图21 Fig.21	驱动桥总成(双排) Drive axle assy.(double tire)	CDGH	32

系统编号 Item	插图序号 Code	名　称 Name	适合机型 Models	页　码 page
02	图22 Fig.22	驱动桥 Drive axle	ABCD	33
	图23 Fig.23	液力变速操纵总成 Hydraulic speed control assembly	ABCDEFGH	35
03	图24 Fig.24	转向操纵总成 Steering control assembly	ABCDEFGH	37
	图25 Fig.25	转向桥总成 Steering axle assy.	ABCDEFGH	39
	图26 Fig.26	转向桥 Steering axle	ABCDEFGH	40
	图27 Fig.27	转向轮 Steering wheel	ABCDEFGH	42
06	图28 Fig.28	行车制动总成 Service brake assy.	ABCDEFGH	43
07	图29 Fig.29	停车制动操纵 Parking brake control	ABCDEFGH	46
08	图30 Fig.30	车架 Chassis	ABCDEFGH	47
09	图31 Fig.31	覆盖件系统 Outer panel system	ABCDEFGH	48
10	图32 Fig.32	门架(基本型) Mast (normal mast)	ABCDEFGH	51
	图33 Fig.33	货叉及货叉架(基本型) Fork & Fork carrier(normal mast)	ABCDEFGH	55
	图34 Fig.34	起升油缸(基本型) Lift cylinder (normal mast)	ABEF	58
	图35 Fig.35	起升油缸(基本型) Lift cylinder (normal mast)	CDGH	61
	图36 Fig.36	倾斜油缸 Tilt cylinder (normal mast)	ABCDEFGH	64
	图37 Fig.37	侧移管路(基本型) Side shifting pipeline (Normal mast)	ABEF	68
	图38 Fig.38	侧移管路(基本型) Side shifting pipeline (Normal mast)	CDGH	70
	图39 Fig.39	起升管路(基本型) Lift pipeline (normal mast)	ABEF	72
	图40 Fig.40	起升管路(基本型) Lift pipeline (normal mast)	CDGH	73
11	图41 Fig.41	多路阀操纵(五联) Multi-way valve control(quintuplex)	ABCDEFGH	75
12	图42 Fig.42	液压系统 Hydraulic system	ABCD	77
	图43 Fig.43	液压系统 Hydraulic system	EFGH	81

目录/Contents

系统编号 Item	插图序号 Code	名　称 Name	适合机型 Models	页　码 page
12	图44 Fig.44	液压油箱 Hydraulic oil tank	ABCDEFGH	85
13	图45 Fig.45	油冷却管路总成 Oil cooling pipe assembly	EFGH	86
14	图46 Fig.46	护顶架 Overhead guard	ABCDEFGH	87
15	图47 Fig.47	电气系统 Electric system	ABCD	90
	图48 Fig.48	电气系统 Electric system	EFGH	93
	图49 Fig.49	蓄电池盒总成 Battery box assy.	ABCDEFGH	96
16	图50 Fig.50	标牌 Label	ABCDEFGH	97
17	图51 Fig.51	平衡重 Counter weight	ABCDEFGH	100
19	图52 Fig.52	液化石油气装置总成 LPG device assy.	ABCD	101

图1/FIG.1 发动机总成/Engine assy.

A CPYD20XH06
B CPYD25XH06
C CPYD30XH06
D CPYD35XH06

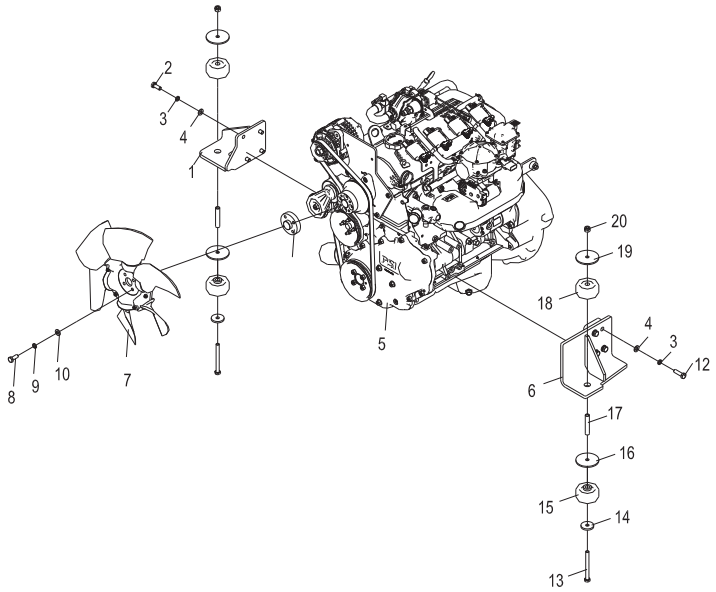

序号 Item No	编码 Code	图号 Part No	零部件名称 Description		数量 Q'ty	备注 Remark
1	30001018238	CPYD35LH06.01.01.02	支架焊合	Bracket weldment	1	
2	51207105114	GB/T5786	螺栓M10×1.25×25	Bolt M10×1.25×25	4	
3	51401100107	GB/T93	垫圈10	Washer 10	8	
4	51421100115	GB/T97.1	垫圈10	Washer 10	8	
5	60100012604	PSI2.4LL4	发动机总成	Engine assy.	1	
6	30001018239	CPYD35LH06.01.01.01	支架焊合	Bracket weldment	1	
7	60700000588	LG0025GLTHGIII.01.06	风扇总成	Fan assy.	1	
8	51204091514	GB/T5783	螺栓M8×45	Bolt M8×45	4	
9	51401090107	GB/T93	垫圈8	Washer 8	4	
10	51421090115	GB/T97.1	垫圈8	Washer 8	4	
11	30001106303	LG0025GLTHGIII.01-001	垫块	Block	1	
12	51207105314	GB/T5786	螺栓M10×1.25×35	Bolt M10×1.25×35	4	
13A	30001011502	30D-0152000	发动机支承总成	Engine support	2	含13-20项
13	51203103114	GB/T5782	螺栓M10×110	Bolt M10×110	1	
14	30001106402	30D-0152001	垫圈	Washer	1	
15	30001109003	30D-0152002	减震垫	Rubber gasket	1	
16	30001106403	30D-0152003	垫圈	Washer	1	
17	30001112306	30D-0152004	套管	Thimber	1	

图1/FIG.1 发动机总成/Engine assy.

A CPYD20XH06
B CPYD25XH06
C CPYD30XH06
D CPYD35XH06

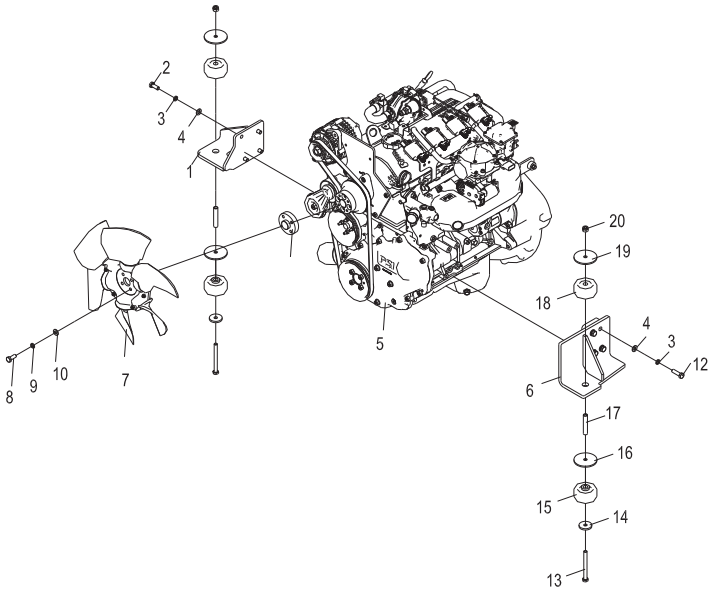

序号 Item No	编码 Code	图号 Part No	零部件名称 Description	数量 Q'ty	备注 Remark
18	30001109012	30D-0152005	减震垫 Rubber gasket	1	
19	30002118201	LG0060DT.02.03-003	垫片 Gasket	1	
20	51347000419	GB/T6184	螺母M10 Nut M10	1	

图2/FIG.2 发动机总成/Engine assy.

E CPCD20XX33
F CPCD25XX33
G CPCD30XX33
H CPCD35XX33

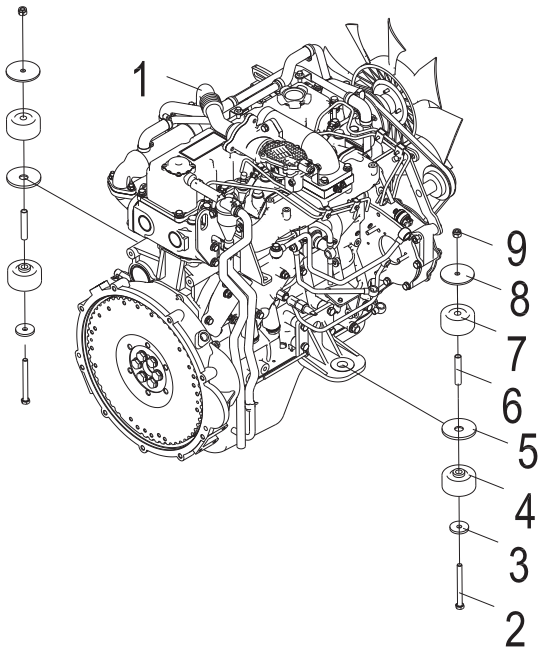

序号 Item No	编码 Code	图号 Part No	零部件名称 Description		数量 Q'ty	备注 Remark
1	60100013513	3E22YG51-011A	发动机总成	Engine assy.	1	
2A	30001011502	30D-0152000	发动机支承总成	Engine assy.	2	
2	51203103114	GB/T5782	螺栓M10×110	Bolt M10×110	1	
3	30001106402	30D-0152001	垫圈	Washer	1	
4	30001109003	30D-0152002	减震垫	Damping cushion	1	
5	30001106403	30D-0152003	垫圈	Sleeve	1	
6	30001112306	30D-0152004	套管	Thimb	1	
7	30001109012	30D-0152005	减震垫	Nut M10	1	
8	30002118201	LG0060DT.02.03-003	垫片		1	
9	51347000419	GB/T6184	螺母M10		1	

图3/FIG.3 空滤器总成/Air filter assy.

A CPYD20XH06
B CPYD25XH06
C CPYD30XH06
D CPYD35XH06

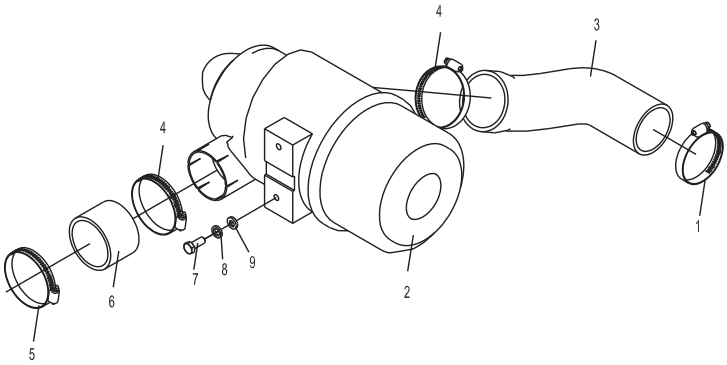

序号 Item No	编码 Code	图号 Part No	零部件名称 Description		数量 Q'ty	备注 Remark
1	56171002701	JB/T8870	喉箍d60（40~60）	Hoop d60(40~60)	1	
2	60800008665	CPCD30XX33.01.01.01	空滤器总成	Air filter assy.	1	
3	60800008666	CPCD30XX33.01.01-001	成型管	Molding pipe	1	
4	56171002801	JB/T8870	喉箍d100（80~100）	Hoop d100(80~100)	2	
5	56171002201	JB/T8870	喉箍d80（60~80）	Hoop d80(60~80)	1	
6	60100010815	CPCD30LX20.01.01-002	成型管	Molding pipe	1	
7	51204091014	GB/T5783	螺栓M8×20	Bolt M8×20	2	
8	51401090107	GB/T93	垫圈8	Washer 8	2	
9	51421090115	GB/T97.1	垫圈8	Washer 8	2	

图4/FIG.4 空滤器总成/Air filter assy.

E CPCD20XX33
F CPCD25XX33
G CPCD30XX33
H CPCD35XX33

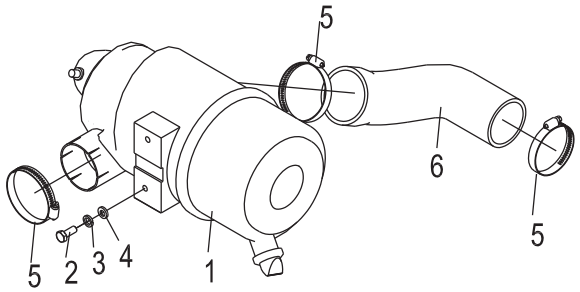

序号 Item No	编码 Code	图号 Part No	零部件名称 Description		数量 Q'ty	备注 Remark
1	60100003872	LG0035DTN.01.01.01	空滤器总成	Hoop d60(40~60)	1	
2	51204091014	GB/T5783	螺栓M8×20	Bolt M8×20	2	
3	51401090107	GB/T93	垫圈8	Washer 8	2	
4	51421090115	GB/T97.1	垫圈8	Washer 8	2	
5	56171002201	JB/T8870	喉箍d80（60~80）	Hoop d100(80~100)	3	
6	60700012835	CPYD30XH06.01.01-001	成型管	Molding pipe	1	

图5/FIG.5 冷却系统/Cooling system

A CPYD20XH06
B CPYD25XH06
C CPYD30XH06
D CPYD35XH06

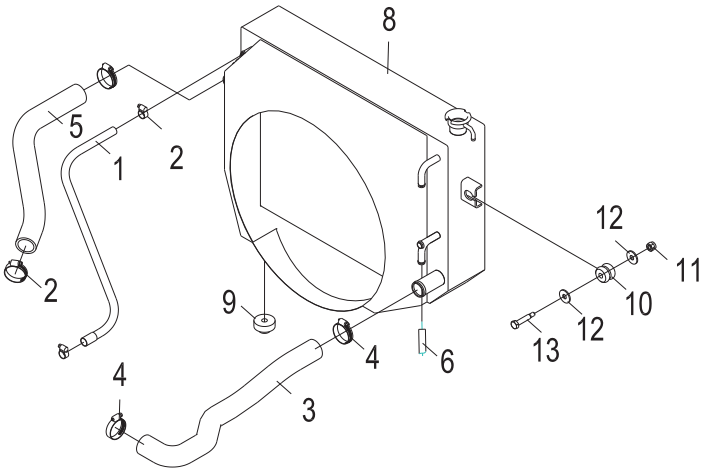

序号 Item No	编码 Code	图号 Part No	零部件名称 Description		数量 Q'ty	备注 Remark
1	30001018238	CPYD35LH06.01.01.02	支架焊合	Bracket weldment	1	
2	51207105114	GB/T5786	螺栓M10×1. 25×25	Bolt M10×1.25×25	4	
3	51401100107	GB/T93	垫圈10	Washer 10	8	
4	51421100115	GB/T97.1	垫圈10	Washer 10	8	
5	60100012604	PSI2.4LL4	发动机总成	Engine assy.	1	
6	30001018239	CPYD35LH06.01.01.01	支架焊合	Bracket weldment	1	
7	60700000588	LG0025GLTHGIII.01.06	风扇总成	Fan assy.	1	
8	51204091514	GB/T5783	螺栓M8×45	Bolt M8×45	4	
9	51401090107	GB/T93	垫圈8	Washer 8	4	
10	51421090115	GB/T97.1	垫圈8	Washer 8	4	
11	30001106303	LG0025GLTHGIII.01-001	垫块	Block	1	
12	51207105314	GB/T5786	螺栓M10×1. 25×35	Bolt M10×1.25×35	4	
13A	30001011502	30D-0152000	发动机支承总成	Engine support assy.	2	含13-20项
13	51203103114	GB/T5782	螺栓M10×110	Bolt M10×110	1	
14	30001106402	30D-0152001	垫圈	Washer	1	
15	30001109003	30D-0152002	减震垫	Rubber gasket	1	
16	30001106403	30D-0152003	垫圈	Washer	1	
17	30001112306	30D-0152004	套管	Thimber	1	

图5/FIG.5 冷却系统/Cooling system

A CPYD20XH06
B CPYD25XH06
C CPYD30XH06
D CPYD35XH06

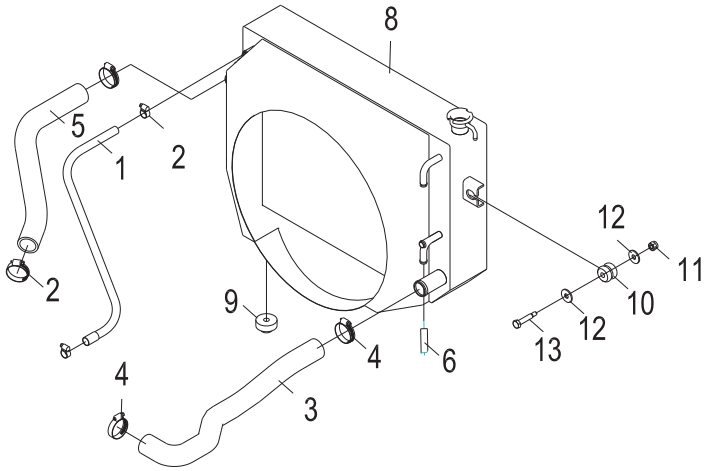

序号 Item No	编码 Code	图号 Part No	零部件名称 Description	数量 Q'ty	备注 Remark
18	30001109012	30D-0152005	减震垫 Rubber gasket	1	
19	30002118201	LG0060DT.02.03-003	垫片 Gasket	1	
20	51347000419	GB/T6184	螺母M10 Nut M10	1	

图6/FIG.6 冷却系统/Cooling system

E CPCD20XX33
F CPCD25XX33
G CPCD30XX33
H CPCD35XX33

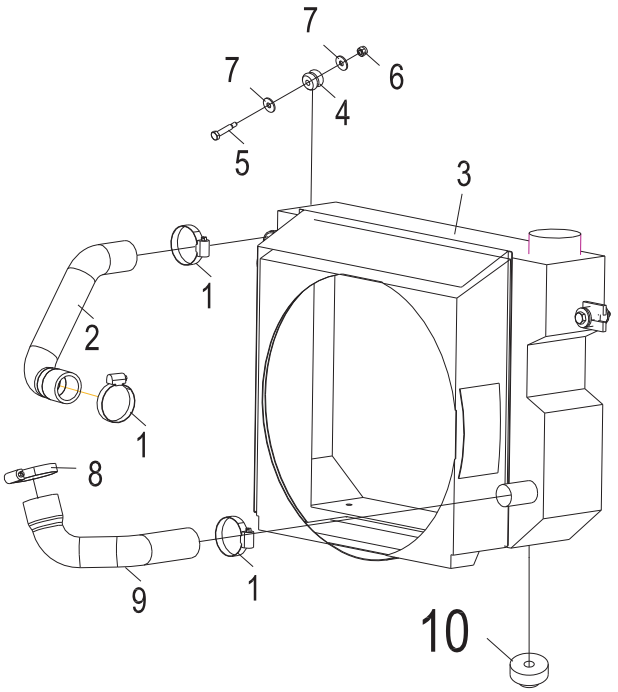

序号 Item No	编码 Code	图号 Part No	零部件名称 Description		数量 Q'ty	备注 Remark
1	56171002701	JB/T8870	喉箍d60（40~60）	Hoop	3	Φ10×3.5-L=950
2	60800008660	CPCD30XX33.01.02-001	成型管	Molding pipe	1	
3	17104015809	CPCD30XX33.01.02.01	散热器总成	Radiator assy.	1	
4	30001109000	30D-0121003	减震垫	Rubber gasket	2	
5	60911011061	30D-0141004	六角螺栓	Hexagon bolt	2	
6	51341000519	GB/T889.1	螺母M8	Nut M8	2	Φ13×4-L=1500
7	51420100121	GB/T96.1	垫圈10	Washer 10	4	Φ13×4-L=1300
8	56171001001	JB/T8870	喉箍d70（50~70）	Hoop	1	
9	60800008661	CPCD30XX33.01.02-002	成型管	Molding pipe	1	
10	30001109001	30D-0121004	减震垫	Rubber gasket	2	

图7/FIG.7 燃油装置总成/Fuel device assy.

E CPCD20XX33
F CPCD25XX33
G CPCD30XX33
H CPCD35XX33

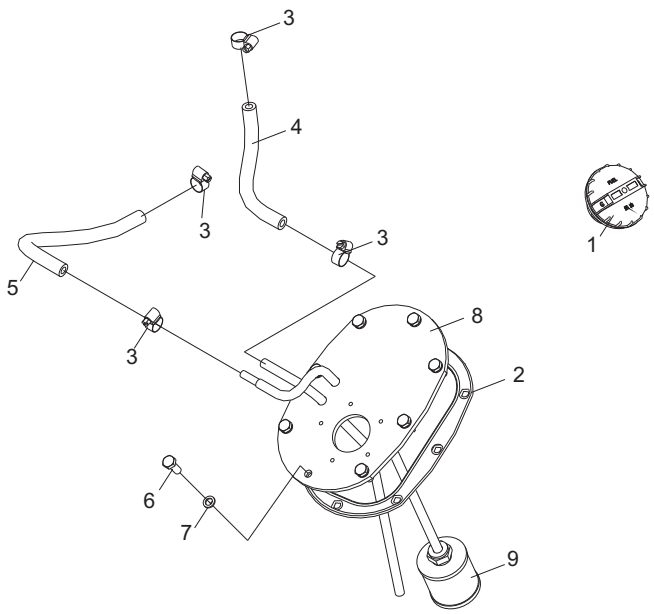

序号 Item No	编码 Code	图号 Part No	零部件名称 Description	数量 Q'ty	备注 Remark
1	60980000847	30D-0131400	加油口盖 Oil filler cap	1	
2	56171000101	JB/T8870	喉箍d16(10~16) Hoop d16(10-16)	4	
3	60700002810	LG0035DTN.01.04-002	密封垫 Seal gasket	1	
4	30001109204	LG0030DTIG.01.03-001	胶管Φ8×4-L=1150 Hose Φ8×4-L=1150	1	
	30001109233	LG0030DTIG.01.03-004	胶管Φ8×4-L=250 Hose Φ8×4-L=250	1	
5	30001109268	LG0050DTRBⅣ.01.04-002	胶管Φ8×4-L=825 Hose Φ8×4-L=825	1	
	30001109243	LG0030DTIHⅢ.01.02-001	胶管Φ8×4-L=300 Hose Φ8×4-L=300	1	
6	51204091014	GB/T5783	螺栓M8×20 Bolt M8×20	8	
7	51401090107	GB/T93	垫圈8 Washer 8	8	
8	60700002808	LG0035DTN.01.04.02	燃油箱盖板焊合 Fuel tank cover plate weldment	1	
9	30001015101	30D-0131200	滤芯总成 Filter element assy.	1	

图8/FIG.8 消声器总成/Muffler assy.

A CPYD20XH06
B CPYD25XH06
C CPYD30XH06
D CPYD35XH06

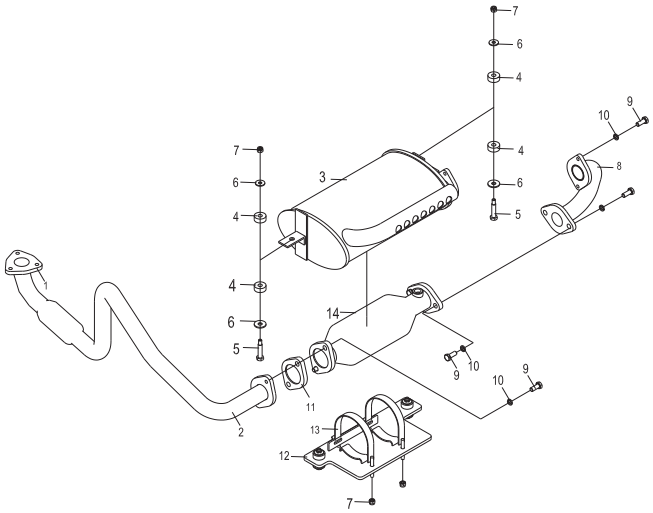

序号 Item No	编码 Code	图号 Part No	零部件名称 Description		数量 Q'ty	备注 Remark
1	60700012774	CPYD35LH06.01.01.03	无石棉垫片	Gasket	1	
2	60300016560	CPYD25XH06.01.03.02	钢管总成	Steel tube assy.	1	AB
	60700012839	CPYD30XH06.01.03.02	钢管总成	Steel tube assy.	1	CD
3	60300016559	CPYD25XH06.01.03.01	消声器焊合	Muffler assy.	1	AB
	60700012838	CPYD30XH06.01.03.01	消声器焊合	Muffler assy.	1	CD
4	30001113900	30D-0141001	橡胶垫	Rubber gasket	8	
5	60911011061	30D-0141004	六角螺栓	Hexagon bolt	4	
6	51420100121	GB/T96.1	垫圈10	Washer 10	8	
7	51341000519	GB/T889.1	螺母M8	Nut M8	8	
8	60300016561	CPYD25XH06.01.03.03	钢管总成	Steel tube assy.	1	AB
	60700012840	CPYD30XH06.01.03.03	钢管总成	Steel tube assy.	1	CD
9	51204101114	GB/T5783	螺栓M10×25	Bolt M10×25	6	
10	51401100107	GB/T93	垫圈10	Washer 10	6	
11	30001111508	LG0030DⅢ.01.03.04	密封垫	Seal gasket	4	
12	30001018241	CPYD30X6H06.01.03.04	支架焊合	Bracket weldment	1	
13	30001018153	LG0025GLTHGⅢ.01.02.02	支架焊合	Bracket weldment	2	
14	60700012855	CPYD30XH06.01.03.05	三元催化器总成	Three-element catalyst	1	

图9/FIG.9 后处理总成/After-treatment assy.

E CPCD20XX33
F CPCD25XX33
G CPCD30XX33
H CPCD35XX33

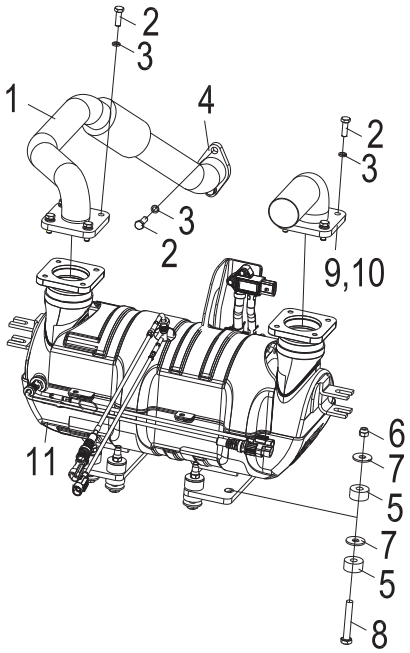

序号 Item No	编码 Code	图号 Part No	零部件名称 Description		数量 Q'ty	备注 Remark
1	60700012774	CPYD35LH06.01.01.03	无石棉垫片	Gasket	1	
2	60300016560	CPYD25XH06.01.03.02	钢管总成	Steel tube assy.	1	AB
	60700012839	CPYD30XH06.01.03.02	钢管总成	Steel tube assy.	1	CD
3	60300016559	CPYD25XH06.01.03.01	消声器焊合	Muffler assy.	1	AB
	60700012838	CPYD30XH06.01.03.01	消声器焊合	Muffler assy.	1	CD
4	30001113900	30D-0141001	橡胶垫	Rubber gasket	8	
5	60911011061	30D-0141004	六角螺栓	Hexagon bolt	4	
6	51420100121	GB/T96.1	垫圈10	Washer 10	8	
7	51341000519	GB/T889.1	螺母M8	Nut M8	8	
8	60300016561	CPYD25XH06.01.03.03	钢管总成	Steel tube assy.	1	AB
	60700012840	CPYD30XH06.01.03.03	钢管总成	Steel tube assy.	1	CD
9	51204101114	GB/T5783	螺栓M10×25	Bolt M10×25	6	
10	51401100107	GB/T93	垫圈10	Washer 10	6	
11	30001111508	LG0030DⅢ.01.03.04	密封垫	Seal gasket	4	
12	30001018241	CPYD30X6H06.01.03.04	支架焊合	Bracket weldment	1	
13	30001018153	LG0025GLTHGⅢ.01.02.02	支架焊合	Bracket weldment	2	
14	60700012855	CPYD30XH06.01.03.05	三元催化器总成	Three-element catalyst	1	

图10/FIG.10 传动系统/Drive system

A CPYD20XH06
B CPYD25XH06
C CPYD30XH06
D CPYD35XH06
E CPCD20XX33
F CPCD25XX33
G CPCD30XX33
H CPCD35XX33

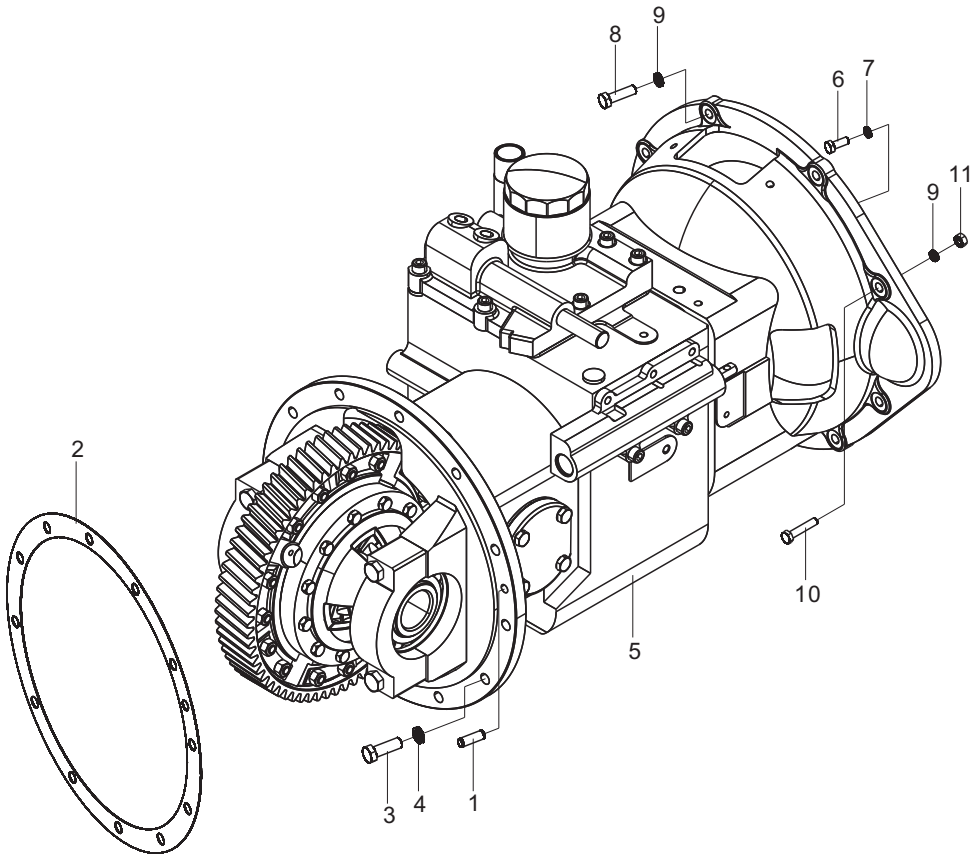

传动系统/Drive system

序号 Item No	编　码 Code	图　号 Part No	零部件名称 Description		数量 Q'ty	备　注 Remark
1	51517121702	GB/T119.2	销10×30	Pin10×30	1	
2	30001111503	LG0030D.02-001	密封垫	Seal gasket	1	
3	51207115314	GB/T5786	螺栓M12×1. 25×35	Bolt M12×1.25×35	12	
4	51401110107	GB/T93	垫圈12	Washer 12	12	
5	30002020335	LG0030DTIH.02.01	变速箱总成	Transmission assembly	1	
6	51204091014	GB/T5783	螺栓M8×20	Bolt M8×20	12	
7	51401090107	GB/T93	垫圈8	Washer 8	12	
8	51207105314	GB/T5786	螺栓M10×1. 25×35	Bolt M10×1.25×35	7	
9	51401100107	GB/T93	垫圈10	Washer 10	8	
10	51203102114	GB/T5782	螺栓M10×75	Bolt M10×75	1	
11	51307001019	GB/T6170	螺母M10	Nut M10	1	

图11/FIG.11 变速箱 1/Gearbox 1

A CPYD20XH06
B CPYD25XH06
C CPYD30XH06
D CPYD35XH06
E CPCD20XX33
F CPCD25XX33
G CPCD30XX33
H CPCD35XX33

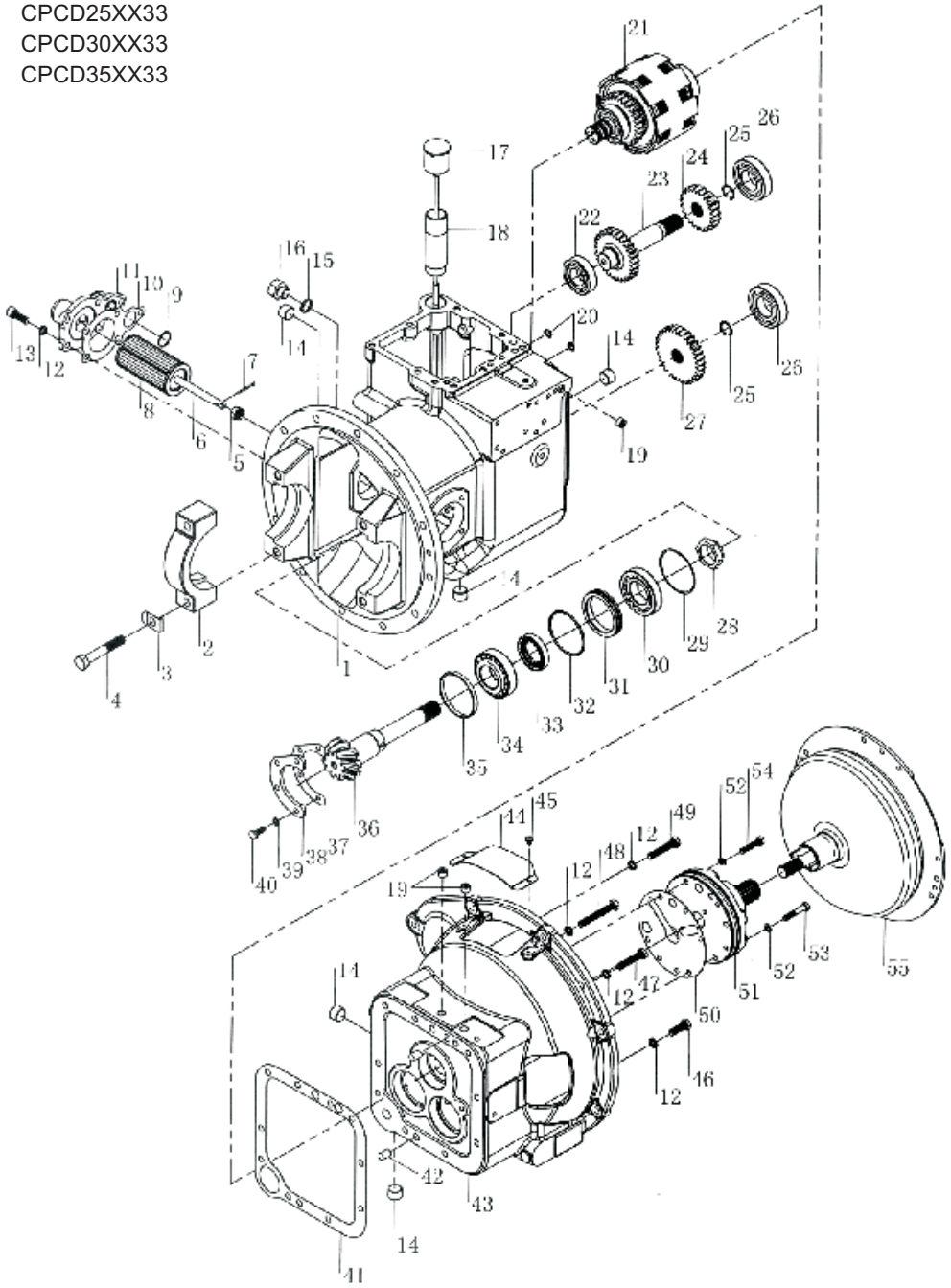

变速箱 1/Gearbox 1

序号 Item No	代号 Specification	零部件名称 Description		数量 Q'ty	备 注 Remark
1	YQX30AS-0101	壳体	Case	1	
2	YQX30-0102	轴承座	Bearing carrier	2	
3	YQX30-0023	锁片	Lock plate	4	
4	YQX30-0101	螺栓	Bolt	4	
5	GB6181-86	螺母M12	Nut M12	1	
6	YQX30AS-0502	螺杆	Screw stud	1	
7	GB91-86	开口销3. 2X28	Cotter pin 3.2×28	1	
8	YQX30AS-0510	滤网组件	Filter screen element	1	
9	GB1235-76	0形密封圈28X2. 4	O-ring 28×2.4	1	
10	YQX30AS-0503	纸垫	Paper gasket	1	
11	YQX30AS-0501	油滤座	Oil filter seat	1	
12	GB93-87	垫圈10	Washer 10	14	
13	GB70-85	螺钉M10X30	Screw M10×30	5	
14	JB/ZQ4446-86	螺塞R1/2	Plug R1/2	5	
15	Q20-03	密封垫	Seal gasket	1	
16	JDS30-0046	螺塞	Plug	1	
17	YQX30-0400	加油器盖组件	Oil filler cap element	1	
18	YQX30-0007	加油管	Oil filling pipe	1	
19	JB/ZQ4446-86	螺塞R1/4	Plug R1/4	3	
20	GB1235-76	0形密封圈15X2. 4	O-ring 15×2.4	2	
21	YQX30-1000A	离合器总成	Clutch assembly	1	
22	GB276-94	球轴承6206	Ball bearing 6206	1	
23	YQX30-0015	惰轮轴	Idler wheel shaft	1	
24	YQX30-0013	惰轮	Idler wheel	1	
25	GB893.1-86	孔用弹性挡圈24	Spring sprag 24	2	
26	GB276-94	球轴承6207	Ball bearing 6207	2	
27	YQX30-0012	输出齿轮	Gear,input	1	
28	YQX30-0014	锁紧螺母	Nut,lock	1	
29	YQX30-0016	垫	Shim	按需	
30	GB297-94	轴承30208	Bearing 30208	1	
31	YQX30-0001	油封保持架	Retainer,oil seal	1	
32	GB1235-76	0形密封圈80X3. 1	O-ring 80×3.1	1	
33	YQX30-0005	输出轴油封	Seal ring	1	
34	GB297-94	轴承32208	Bearing 32208	1	
35	YQX30-0003	轴环	Collar	1	
36	YQX30-0011	输出轴	Output shaft	1	

变速箱 1/Gearbox 1

序号 Item No	代号 Specification	零部件名称 Description		数量 Q'ty	备 注 Remark
37	YQX30-0002	垫片	Gasket	按需	
38	YQX30-0004	支承片	Support plate	1	
39	GB93-87	垫圈8	Washer 8	4	
40	GB5783-86	螺栓M8X20	Bolt M8×20	4	
41	YQX30AS-0001	垫片	Gasket	1	
42	GB119-86	圆柱销B12X20	Cylindrical pin B12×20	2	
43	YQX30-0201	变矩器外壳	Case of torque converter	1	
44	YQX30-0202	盖板	Cover plate	1	
45	GB818-85	十字槽螺钉M6X8	Screw M6×8	2	
46	GB5783-86	螺栓M10X30	Bolt M10×30	4	
47	GB5783-86	螺栓M10X50	Bolt M10×50	1	
48	GB5783-86	螺栓M10X75	Bolt M10×75	1	
49	GB5783-86	螺栓M10X55	Bolt M10×55	3	
50	YQX30-0010	垫片	Gasket	1	
51	YQX30-3000	油泵总成	Oil pump assebmly	1	
52	Q20-03	密封圈8X14X1. 5	Seal ring 8×14×1.5	6	
53	GB5780-86	螺栓M8X45	Bolt M8×45	4	
54	GB5780-86	螺栓M8X40	Bolt M8×40	2	
55	YQX30-6000	液力变矩器总成	Hydraulic torque converter assembly	1	

图12/FIG.12 变速箱 2/Gearbox 2

A CPCD20LX20
B CPCD25LX20
C CPCD30LX20
D CPCD35LX20

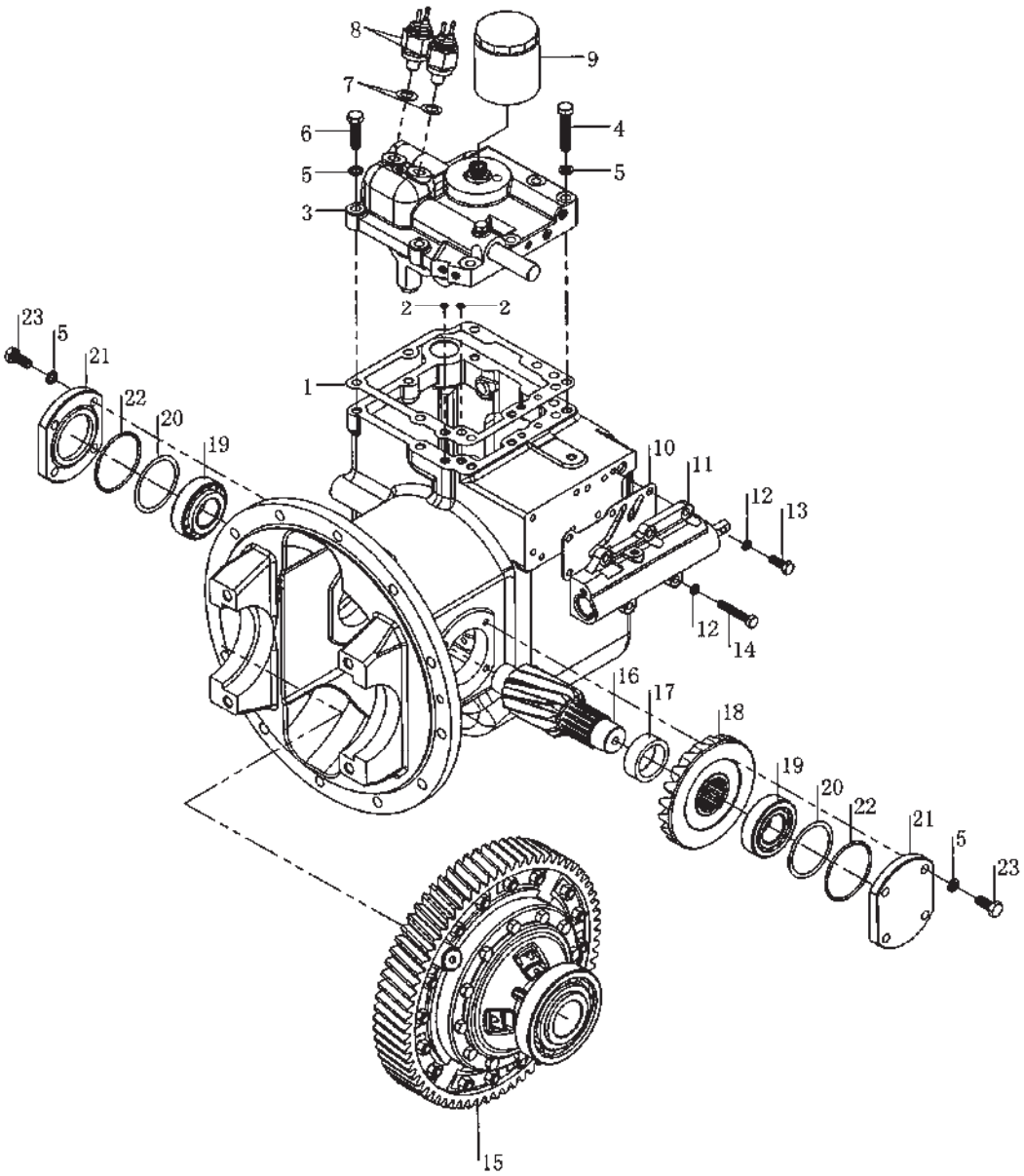

变速箱 2/Gearbox 2

序号 Item No	代号 Specification	零部件名称 Description		数量 Q'ty	备　注 Remark
1	YQX30-0008	垫片	Gasket	1	
2	GB1235-76	O形密封圈11X1. 9	O-ring 11×1.9	2	
3	YQX30-4000	盖和控制阀总成	Cover & control valve assembly	1	
4	GB5783-86	螺栓M10X55	Bolt M10×55	2	
5	GB93-87	弹簧垫圈10	Spring washer 10	16	
6	GB5783-86	螺栓M10X40	Bolt M10×40	6	
7	14×24×2	纸垫圈	Paper gasket	2	
8	JK208	倒车灯开关	Backup lamp witch	2	
9	YQX30-0300	滤油器（II）	Oil filter	1	
10	YQX30-0022	衬垫	Spacer	1	
11	YQX30-5000	微动阀总成	Inching valve assembly	1	
12	GB93-87	弹簧垫圈8	Spring washer 8	5	
13	GB5783-86	螺栓M8X25	Bolt M8×25	3	
14	GB5783-86	螺栓M8X50	Bolt M8×50	2	
15	YQX30-2000	差速器总成	Differential assembly	1	
16	YQX30-0018	齿轴	Gear shaft	1	
17	YQX30-0019	衬套	Bushing	1	
18	YQX30-0020	螺旋伞齿轮	Spiral bevel gear	1	
19	GB297-94	轴承32207	Bearing 32207	2	
20	YQX30-0017	垫片（δ=0. 1, 0. 2, 0. 5）	Shim	按需	
21	YQX30-0021	轴承盖	Bearing cover	2	
22	GB1235-76	O形密封圈75X3. 1	O-ring 75×3.1	2	
23	GB5783-86	螺栓M10X25	Bolt M10×25	8	

图13/FIG.13 液力离合器/Hydraulic Clutch

A CPYD20XH06
B CPYD25XH06
C CPYD30XH06
D CPYD35XH06
E CPCD20XX33
F CPCD25XX33
G CPCD30XX33
H CPCD35XX33

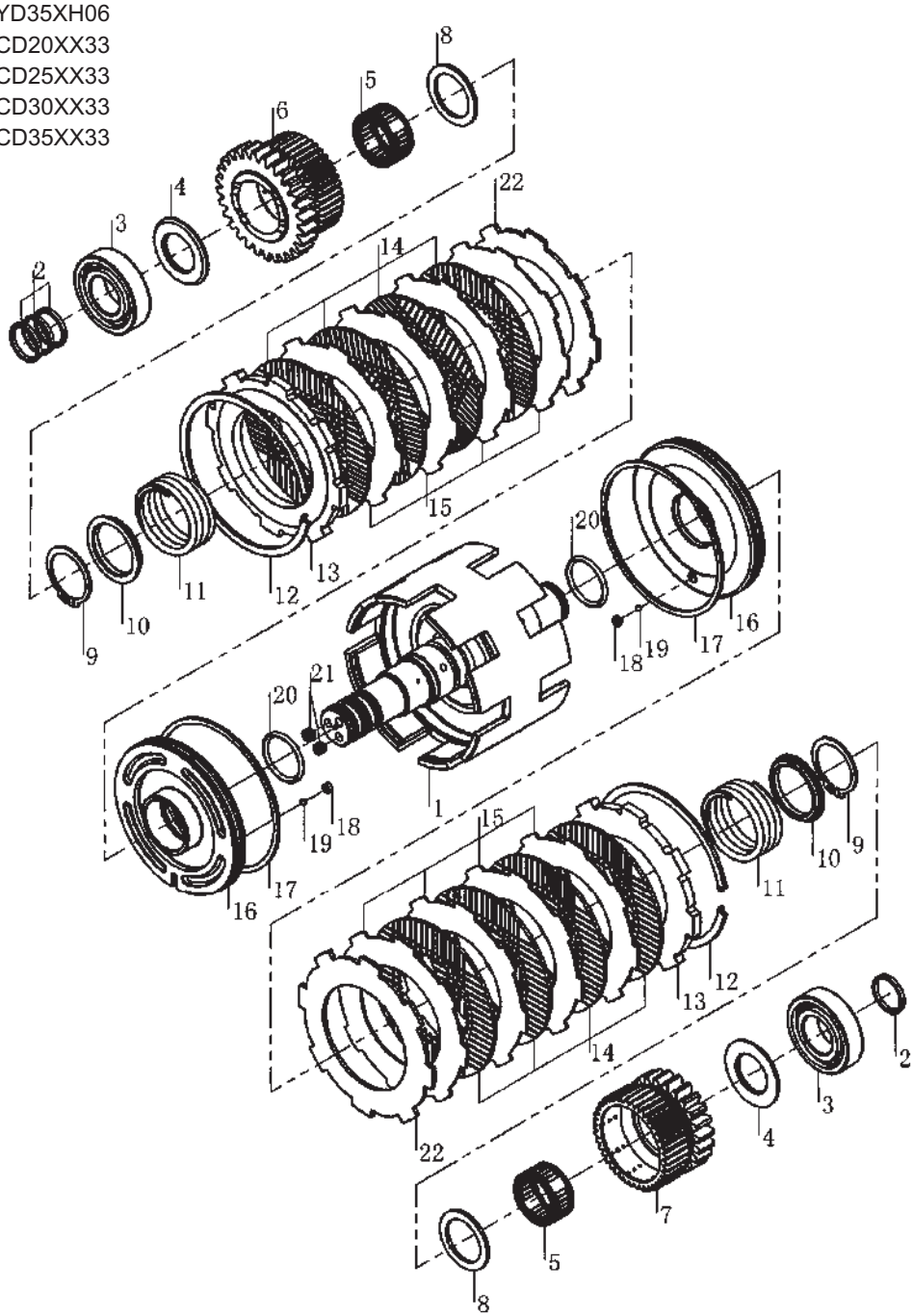

液力离合器/Hydraulic Clutch

序号 Item No	代号 Specification	零部件名称 Description		数量 Q'ty	备　注 Remark
1	YQX30-1100A	输入轴组件	Input shaft element	1	
2	YQX30-1006	密封环（A）	Seal ring	4	
3	GB276-94	轴承6206	Bearing 6206	2	
4	YQX30-1007	离合器-止推环（B）	Clutch- thrust ring(B)	2	
5	K35×42×20	滚针轴承	Needle bearing	2	
6	YQX30-1005	倒车档齿轮	Reverse gear	1	
7	YQX30-1003	前进档齿轮	Forward gear	1	
8	YQX30-1008	离合器-止推环（A）	Clutch- thrust ring(A)	2	
9	GB894.1-86	轴用弹性挡圈40	Spring sprag 40	2	
10	YQX30-1009	弹簧座	Spring seat	2	
11	YQX30-1004	回程弹簧	Return spring	2	
12	YQX30-1014	卡环	Snap ring	2	
13	YQX30-1001	端板	End plate	2	
14	YQX30-1013B	摩擦片	Friction plate	8	
15	YQX30-1012A	隔片	Distance plate	8	
16	YQX30-1002B	活塞	Piston	2	
17	YQX30-1011	密封环（B）	Seal ring (B)	2	
18	YQX30-1010	堵塞	Plug	2	
19	GB308-89	钢球3. 1750 G200b	Steel ball	2	
20	GB1235-76	0形密封圈40X3. 5	O-ring 40×3.5	2	
21	GB78-85	内六角螺钉M8X8	Inner hexagon screw M8×8	2	
22	YQX30-1016	碟形板	Disk plate	2	

图14/FIG.14 油泵/Oil pump

A CPYD20XH06
B CPYD25XH06
C CPYD30XH06
D CPYD35XH06
E CPCD20XX33
F CPCD25XX33
G CPCD30XX33
H CPCD35XX33

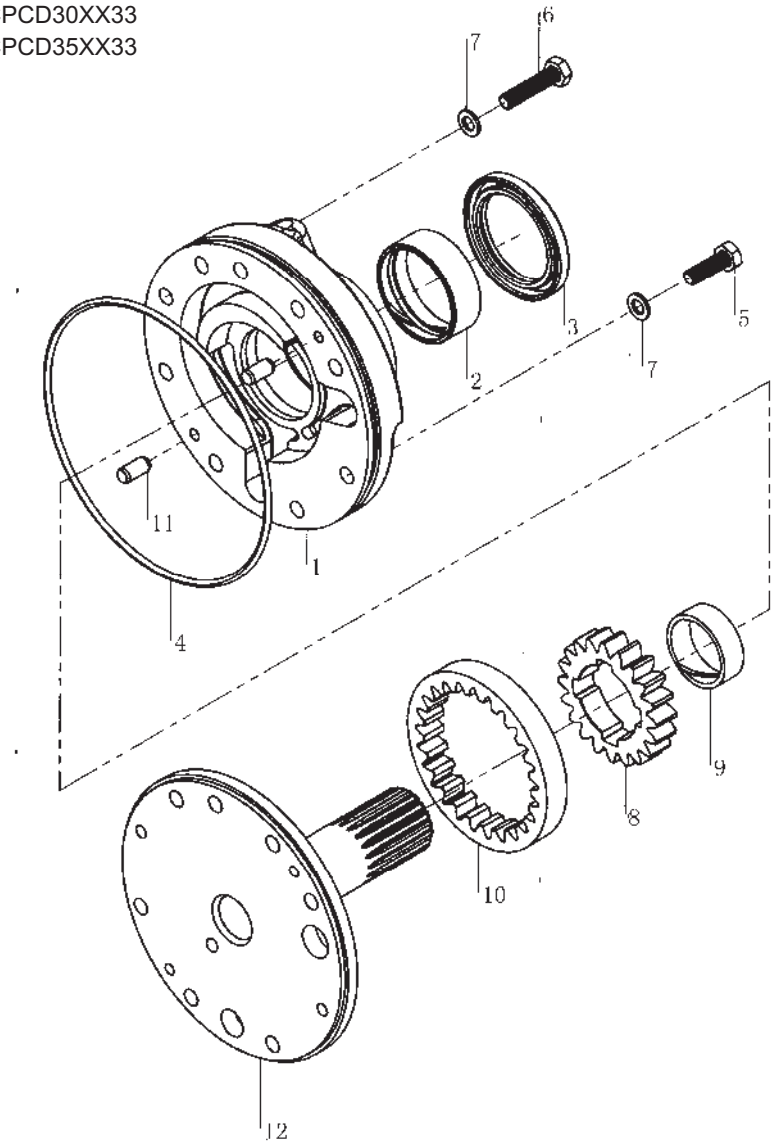

油泵/Oil pump

序号 Item No	代号 Specification	零部件名称 Description		数量 Q'ty	备　注 Remark
1	YQX30-3007	泵壳	Pump case	1	
2	YQX30-3001	衬套	Bushing	1	
3	GB9877.1-88	油封（F）B50X68X8	Oil seal B50×68×8	1	
4	GB3452.1-92	0形密封圈145X3. 55	O-ring 145×3.55	1	
5	GB5783-86	螺栓M8X25	Bolt M8×25	1	
6	GB5783-86	螺栓M8X35	Bolt M8×35	1	
7	Q20-03	密封垫8X14X1. 5	Seal gasket 8×14×1.5	2	
8	YQX30-3003	主动齿轮	Drive gear	1	
9	YQX30-3004	衬套	Bushing	1	
10	YQX30-3005	被动齿轮	Drive gear	1	
11	GB119-86	圆柱销B8X16	Cylindrical pin B8×16	2	
12	YQX30-3006	导轮座	Guide wheel seat	1	

图15/FIG.15

盖和控制阀总成/ Cover & Control valve assy.

A CPYD20XH06
B CPYD25XH06
C CPYD30XH06
D CPYD35XH06
E CPCD20XX33
F CPCD25XX33
G CPCD30XX33
H CPCD35XX33

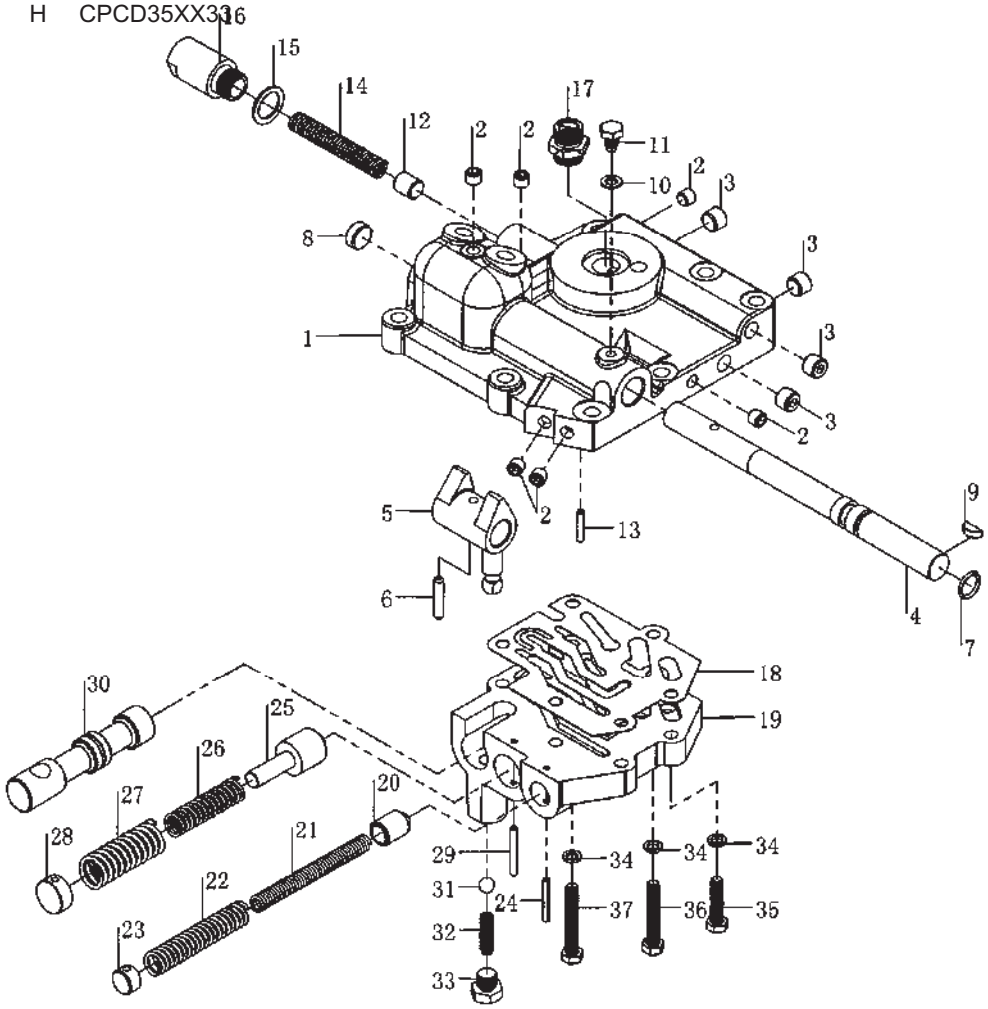

盖和控制阀总成/Cover & Control valve assembly

序号 Item No	代号 Specification	零部件名称 Description		数量 Q'ty	备　注 Remark
1	YQX30-4010	壳体盖	Case cover	1	
2	JB/ZQ4446-86	螺塞R1/8	Plug R1/8	6	
3	JB/ZQ4446-86	螺塞R1/4	Plug R1/4	4	
4	YQX30-4006	变速臂轴	Speed shaft arm	1	
5	YQX30-4008	变速臂	Speed arm	1	
6	GB879-86	弹性圆柱销6X32	Spring cylindrical pin 6×32	1	
7	GB1235-76	O形密封圈20X2. 4	O-ring 20×2.4	1	
8	YQX30-4009	塞子	Plug	1	
9	GB1099-79	半圆键5X19	Woodruff key	1	
10	Q301 B202-86	密封圈8X14X1. 5	Seal ring 8×14×1.5	1	
11	YQX30-4007	固定螺钉	Set screw	1	
12	YQX30-4004	活塞	Piston	1	
13	GB879-86	弹性圆柱销4X25	Spring cylindrical pin 4×25	1	
14	YQX30-4003	弹簧	Spring	1	
15	JB982-77	组合密封垫20	Seal gasket 20	1	
16	YQX30-4002	安全阀盖	Safety valve cover	1	
17	YQX30-4005	管接头	Pipe connector	1	
18	YQX30-4001	垫片	Gasket	1	
19	YQX30-4102	阀体	Valve body	1	
20	YQX30-4108	活塞	Piston	1	
21	YQX30-4106	弹簧	Spring	1	
22	YQX30-4107	弹簧	Spring	1	
23	YQX30-4105	塞	Plug	1	
24	GB879-86	弹性圆柱销4X35	Spring cylindrical pin 4×35	1	
25	YQX30-4112	阀芯	Valve core	1	
26	YQX30-4104	弹簧	Spring	1	
27	YQX30-4111	弹簧	Spring	1	
28	YQX30-4103	塞	Plug	1	
29	GB879-86	弹性圆柱销4X40	Spring cylindrical pin 4×40	1	
30	YQX30-4101	滑阀	Slide valve	1	
31	GB308-89	钢球10. 3188 G200b	Steel ball	1	
32	YQX30-4110	弹簧	Spring	1	
33	YQX30-4109	油塞	Oil plug	1	
34	GB93-87	弹簧垫圈8	Spring washer 8	6	
35	GB5783-86	螺栓M8X35	Bolt M8×35	2	
36	GB5783-86	螺栓M8X50	Bolt M8×50	2	
37	GB5783-86	螺栓M8X55	Bolt M8×55	2	

图16/FIG.16 微动阀/ Inching valve

A CPYD20XH06
B CPYD25XH06
C CPYD30XH06
D CPYD35XH06
E CPCD20XX33
F CPCD25XX33
G CPCD30XX33
H CPCD35XX33

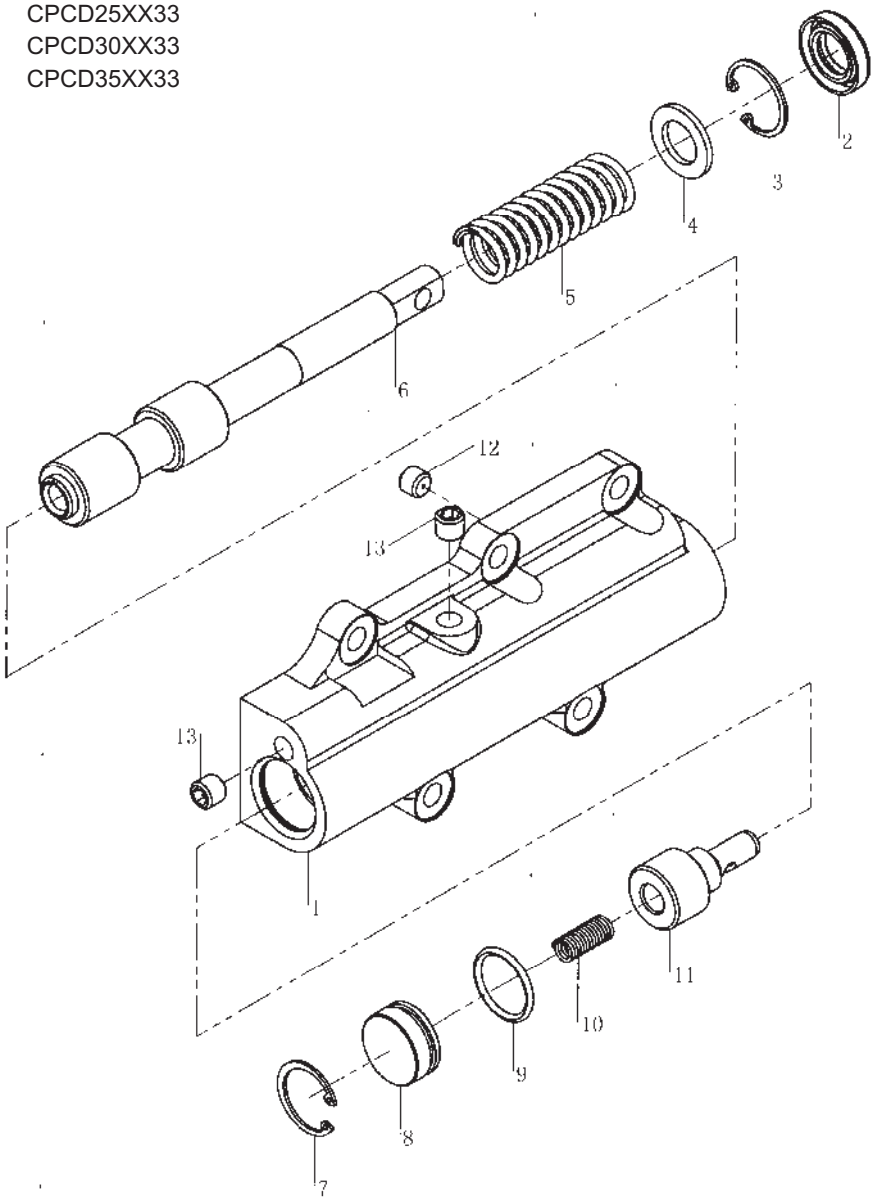

微动阀/Inching valve

序号 Item No	代号 Specification	零部件名称 Description		数量 Q'ty	备　注 Remark
1	YQX30-5008	微动阀体	Body,inching valve	1	
2	GB9877.2-88	油封FW16X30X7	Oil seal FW16×30×7	1	
3	GB893.1-86	孔用弹性挡圈30	Snap ring 30	1	
4	YQX30-5007	垫块	Plate	1	
5	YQX30-5006	弹簧	Spring	1	
6	YQX30-5005	微动阀杆	Inching valve rod	1	
7	GB893.1-86	孔用弹性挡圈28	Snap ring 28	1	
8	YQX30-5004	堵塞	Plug	1	
9	GB3452.1-92	0形密封圈23. 6X2. 65	O-ring 23.6×2.65	1	
10	YQX30-5003	弹簧	Spring	1	
11	YQX30-5009	微动滑阀	Inching spool	1	
12	YQX30-5001	螺塞	Plug	1	
13	JB/ZQ4446-86	螺塞R1/8	Plug R1/8	2	

图17/FIG.17 差速器/Differential

A CPYD20XH06
B CPYD25XH06
C CPYD30XH06
D CPYD35XH06
E CPCD20XX33
F CPCD25XX33
G CPCD30XX33
H CPCD35XX33

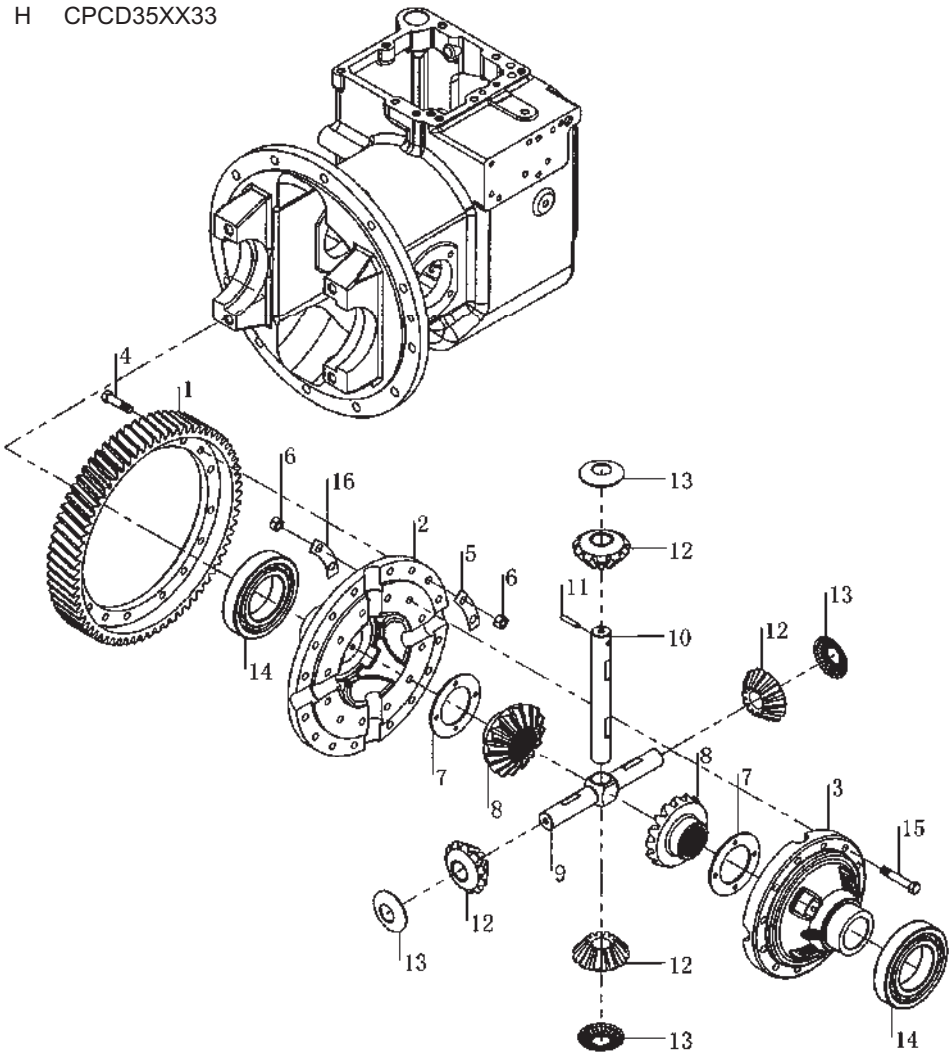

差速器/Differential

序号 Item No	代号 Specification	零部件名称 Description		数量 Q'ty	备　注 Remark
1	YQX30-2003	大齿圈	Ring gear	1	
2	YQX30-2101	差速器右半壳	Right half case of differential	1	
3	YQX30-2102	差速器左半壳	Left half case of differential	1	
4	YQX30-2002	螺栓	Bolt	16	
5	YQX30-2001	锁片(A)	Lock plate(A)	8	
6	GB6176-86	螺母M10X1. 25	Nut M10×1.25	28	
7	YQX30-2007	垫圈	Washer	2	
8	YQX30-2009	半轴齿轮	Axle shaft gear	2	
9	YQX30-2008	齿轮轴（Ⅰ）	Gear shaft(I)	1	
10	YQX30-2005	齿轮轴（Ⅱ）	Gear shaft(II)	1	
11	GB119-86	圆柱销B6X30	Cylindrical pin B6×30	1	
12	YQX30-2006	行星齿轮	Planetary gear	4	
13	YQX30-2004	止推垫圈	Thrust washer	4	
14	GB276-94	深沟球轴承6213	Deep groove ball bearing 6213	2	
15	YQX30-2104	螺栓	Bolt	12	
16	YQX30-2103	锁片（B）	Lock plate(B)	6	

图18/FIG.18 驱动桥总成/Drive axle assy.

A CPYD20XH06
B CPYD25XH06
E CPCD20XX33
F CPCD25XX33

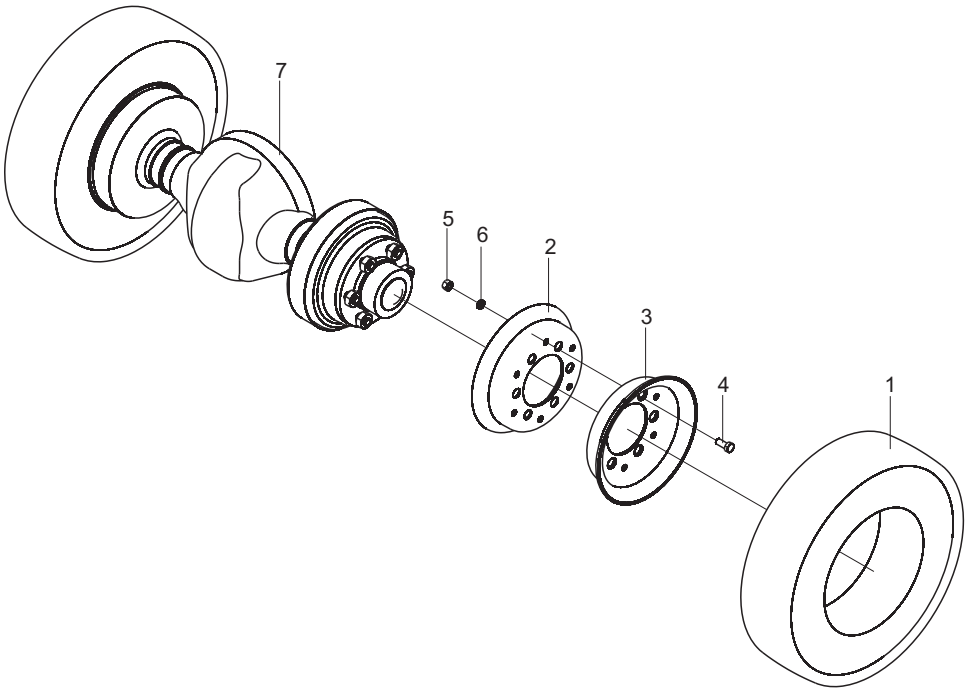

序号 Item No	编码 Code	图号 Part No	零部件名称 Description		数量 Q'ty	备注 Remark
1	60205000175	LG0025D.02.01.02.01	轮胎总成7.00-12-12PR	Tire 7.00-12-12PR	2	
2	60205000161	20D-0201001	内轮辋5.00S-12	Inner rim 5.00S-12	2	
3	60205000162	20D-0201002	外轮辋5.00S-12	Outer rim 5.00S-12	2	
4	30002111100	20D-0201005	螺栓	Bolt	12	
5	51307001319	GB/T6170	螺母M16	Nut M16	12	
6	51401130107	GB/T93	垫圈16	Washer 16	12	
7	30002024535	LG0025DⅢ.02.01.01	驱动桥总成	Drive axle assembly	1	

图19/FIG.19 驱动桥总成/Drive axle assy.

C CPYD30XH06
D CPYD35XH06
G CPCD30XX33
H CPCD35XX33

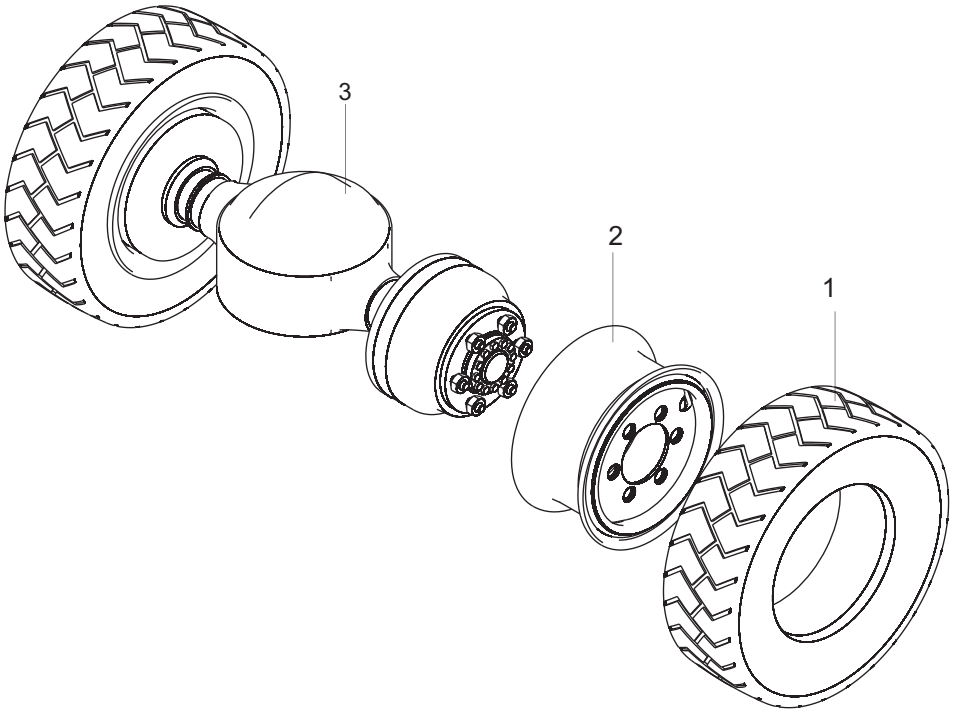

序号 Item No	编码 Code	图号 Part No	零部件名称 Description	数量 Q'ty	备注 Remark
1	60205000183	LG0030D.02.01.03	轮胎总成28X9-15-14PR Tire28×9-15-14PR	2	
2	60205000216	LG0030DⅢ.02.01.01	轮辋总成7. 00T-15 Rim assembly7.00T-15	2	
3	30002024511	30D-0201200	驱动桥总成 Drive axle assembly	1	

图20/FIG.20 驱动桥总成(双排)/ Drive axle assy.(double tire)

A CPYD20XH06
B CPYD25XH06
E CPCD20XX33
F CPCD25XX33

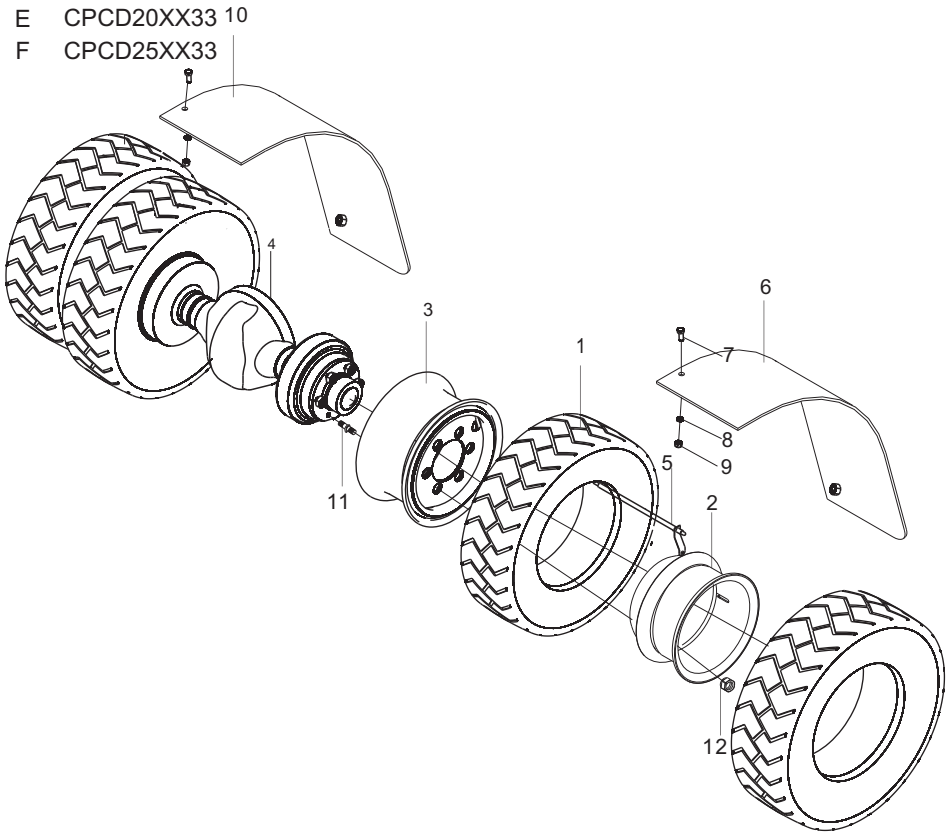

序号 Item No	编码 Code	图号 Part No	零部件名称 Description		数量 Q'ty	备注 Remark
1	60205000175	LG0025D.02.01.02.01	轮胎总成7.00-12-12PR	Tire 7.00-12-12PR	4	
2	60200000114	LG0025DIII.02.02.03	轮辋总成5.00S-12	Rim 5.00S-12	2	
3	60200000113	LG0025DIII.02.02.02	轮辋总成5.00S-12	Rim 5.00S-12	2	
4	30002024558	LG0025DIII.02.02.01	驱动桥总成	Drive axle	1	
5	30002119100	LG0100DT.02.01.02-001	气阀加长管	Lengthening pipe	2	
6	30008154374	LG0025DIII.02.02-001	挡泥板	Baffle	1	
7	51204111314	GB/T5783	螺栓M12×35	Bolt	6	
8	51421110115	GB/T97.1	垫圈12	Washer 12	12	
9	51341000719	GB/T889.1	螺母M12	Nut M12	6	
10	30008154375	LG0025DIII.02.02-002	挡泥板	Baffle	1	
11	68051011264		轮毂螺柱	Hub nut	12	驱动桥带
12	68051011263		轮毂螺母	Hub nut	12	驱动桥带

图21/FIG.21

驱动桥总成(双排)/ Drive axle assy.(double tire)

C CPYD30XH06
D CPYD35XH06
G CPCD30XX33
H CPCD35XX33

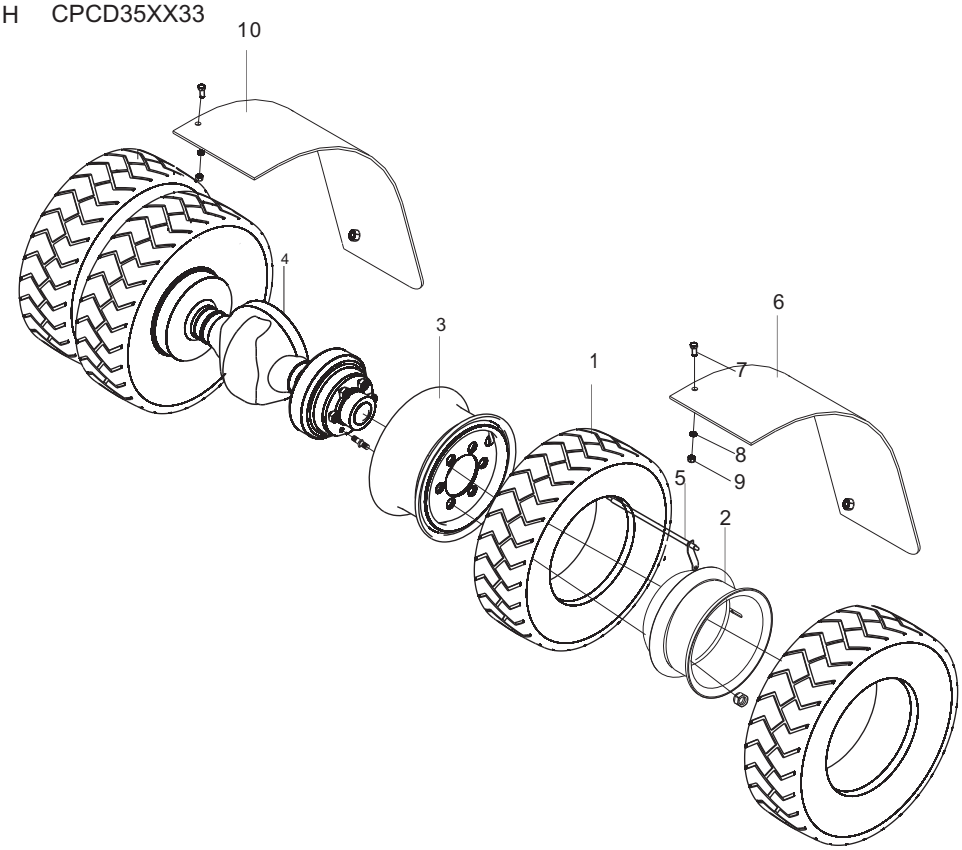

序号 Item No	编码 Code	图号 Part No	零部件名称 Description	数量 Q'ty	备注 Remark
1	60205000183	LG0030D.02.01.03	轮胎总成28×9-15-14PR Tire assembly	4	
2	60205000174	LG0030DⅢ.02.02.02	双排驱动轮辋7.00T-15 Rim 7.00T-15	2	
3	60205000216	LG0030DⅢ.02.01.01	轮辋总成7.00T-15 Rim assembly 7.00T-15	2	
4	30002024552	LG0030DⅢ.02.02.01	驱动桥总成 Drive axle	1	
5	30002119100	LG0100DT.02.01.02-001	气阀加长管 Lengthening pipe	2	
6	30008154356	LG0030DⅢ.08.02-003	挡泥板 Baffle	1	
7	51204111314	GB/T5783	螺栓M12×35 Bolt M12×35	6	
8	51421110115	GB/T97.1	垫圈12 Washer 12	12	
9	51341000719	GB/T889.1	螺母M12 Nut M12	6	
10	30008154357	LG0030DⅢ.08.02-004	挡泥板 Baffle	1	

图22/FIG.22 驱动桥/Drive axle

A CPCD20LX20
B CPCD25LX20
C CPCD30LX20
D CPCD35LX20

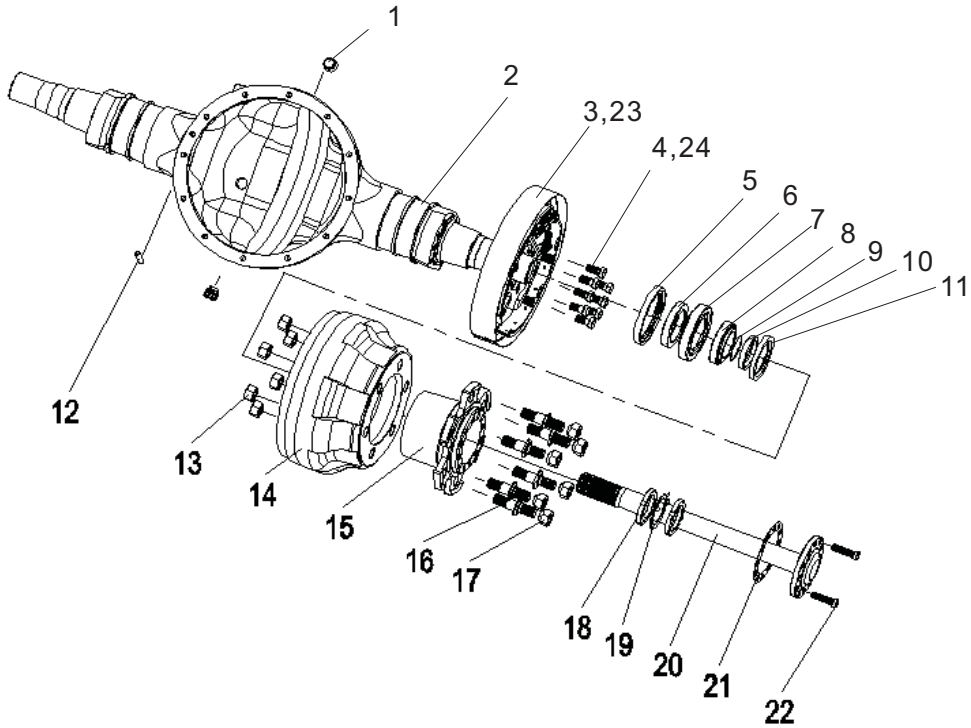

驱动桥/Drive axle

序号 Item No	编码 Code	图号 Part No	零部件名称 Description		数量 Q'ty	备注 Remark
1	36480000008	LG853.04.01.05	螺塞	Plug	2	
2	36401100060	LGQ030AQ-001	桥壳	Axle house	1	CD
	36401100061		桥壳	Axle house	1	Ab
3	36400100180	LGQ030AQ.01	右制动器总成	Right brake assembly	1	CD
	60900000494		右制动器总成	Right brake assembly	1	AB
4	51207121318	GB/T5786	螺栓M14×1.5×35	Bolt M14×1.5×35	16	CD
	51207121318		螺栓M14×1.5×35	Bolt M14×1.5×35	8	AB
5	56177014306	GB/T13871.1	油封FB100×130×13	Oil seal FB100×130×13	2	
6	36400100188	LGQ030AQ-009	轴套2	shaft sleeve	2	
7	52321001401	GB/T297	轴承30214	Bearing 30214	2	
8	52326001202	GB/T297	轴承32012	Bearing 32012	2	
9	56145057211	GB/T3452.1	O形圈56×2.65	O-ring 56×2.65	2	
10	36400100186	LGQ030AQ-007	轴套1	Shaft sleeve 1	2	
11	56177007406	GB/T13871.1	油封FB75×100×10	Oil seal FB75×100×10	2	CD
12	51513131703	GB/T119.1	圆柱销10×30	Cotter pin 10×30	1	
13	51309001020	GB/T6171	螺母M20×1.5	Nut M20×1.5	12	CD
14	36400100181	LGQ030AQ-002	制动鼓	Brake drum	2	CD
	36402100293		制动鼓	Brake drum	2	AB
15	36400100187	LGQ030AQ-008	轮毂	Wheel hub	2	CD
	36402100298		轮毂	Wheel hub	2	AB
16	36400100182	LGQ030AQ-003	轮辋螺栓	Hub bolt	12	CD
	36402100294		轮辋螺栓	Hub bolt	12	AB
17	36400100183	LGQ030AQ-004	轮辋螺母	Hub nut	12	
	36402100295		轮辋螺母	Hub nut	12	AB
18	51363001903	GB/T810	螺母M60×2	Bolt M60×2	4	
19	51439340105	GB/T858	垫圈60	Washer 60	2	
20	36400100185	LGQ030AQ-006	半轴	Axle shaft	2	CD
	36402100297		半轴	Axle shaft	2	AB
21	36400100184	LGQ030AQ-005	纸垫	Paper gasket	2	
22	36402100292	LGQ030AQ-010	半轴螺栓	Axle shaft bolt	4	
23	36400100189	LGQ030AQ.02	左制动器总成	Left brake	1	CD
	60900000495		左制动器总成	Left brake	1	AB
24	51207121218		螺栓M14×1.5×30	Bolt M14×1.5×30	8	AB

图23/FIG.23

液力变速操纵总成/ Hydraulic speed control

A CPYD20XH06
B CPYD25XH06
C CPYD30XH06
D CPYD35XH06
E CPCD20XX33
F CPCD25XX33
G CPCD30XX33
H CPCD35XX33

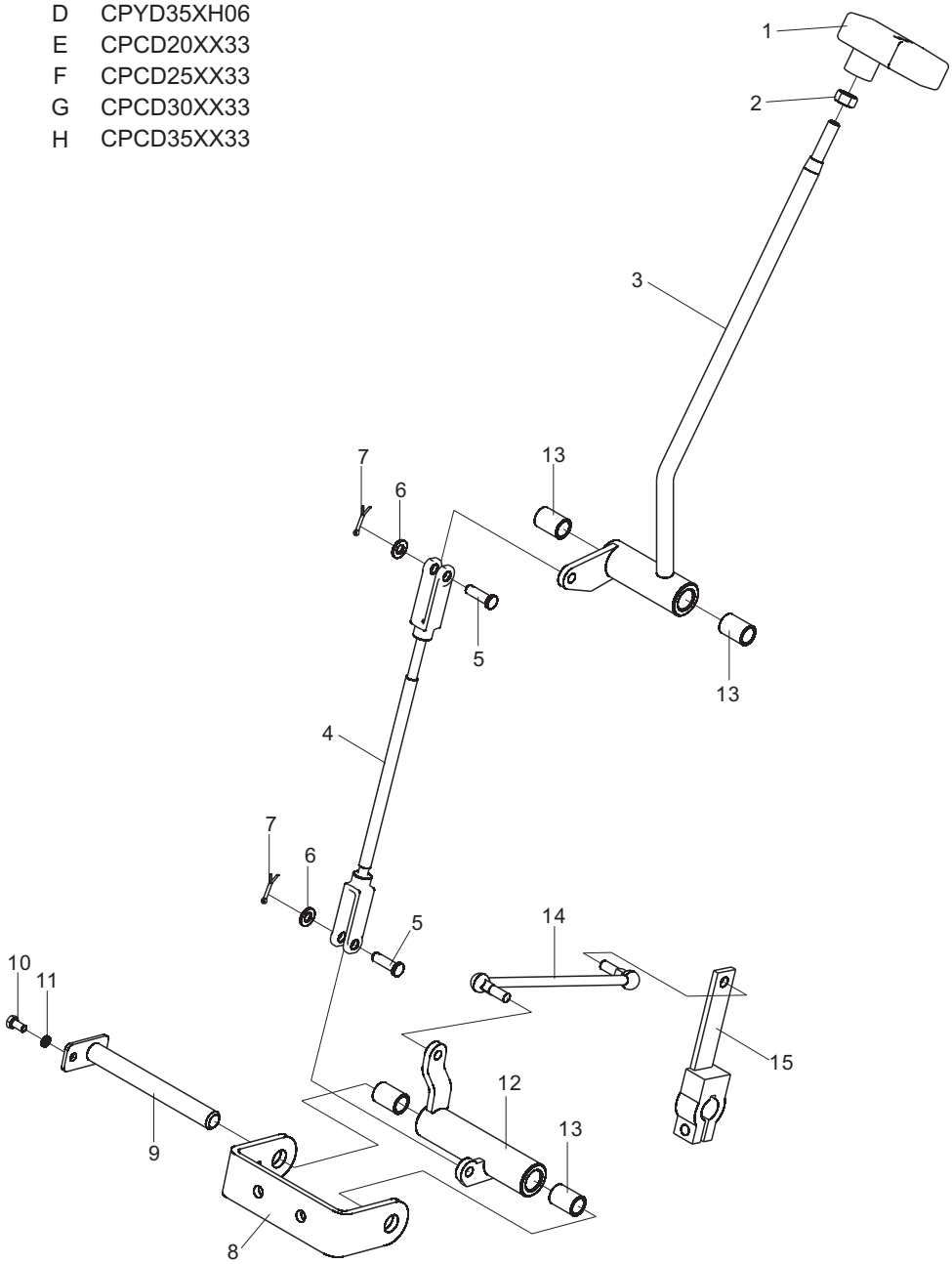

液力变速操纵总成/Hydraulic speed control

序号 Item No	编码 Code	图号 Part No	零部件名称 Description		数量 Q'ty	备注 Remark
1	60980000549	30T-0221001	变速手柄球	Speed handle ball	1	
2	51307001019	GB/T6170	螺母M10	Nut M10	1	
3	30002020602	LG0030DTIII.02.01.01	操纵杆焊合	Joystick weldment	1	
4	30002022802	LG0030DTIII.02.01.08	连接杆	Connecting rod	1	
5	51511051002	GB/T882	销B8×24	Pin B8×24	2	
6	51421090115	GB/T97.1	垫圈8	Washer 8	2	
7	51512081201	GB/T91	销3. 2X25	Pin 3.2×25	2	
8	30002018104	LG0030DTIII.02.01.06	支架焊合	Bracket weldment	1	
9	30002025004	LG0030DTIII.02.01.03	销轴焊合	Pin shaft weldment	1	
10	51204080814	GB/T5783	螺栓M6X12	Bolt M6×12	1	
11	51401080107	GB/T93	垫圈6	Washer 6	1	
12	30002026501	LG0030DTIII.02.01.04	轴套焊合	Sleeve weldmentr	1	
13	52011000101	GB/T12613.1	滑动轴承16X18X25	Sliding bearing 16×18×25	2	
14	30002022901	LG0030DTIII.02.01.05	连杆总成	Linkage assembly	1	
15	30002025604	LG0030DTIII.02.01.07	摇臂焊合	Rocker weldment	1	

图24/FIG.24

转向操纵总成/ Steering control assy.

A	CPYD20XH06
B	CPYD25XH06
C	CPYD30XH06
D	CPYD35XH06
E	CPCD20XX33
F	CPCD25XX33
G	CPCD30XX33
H	CPCD35XX33

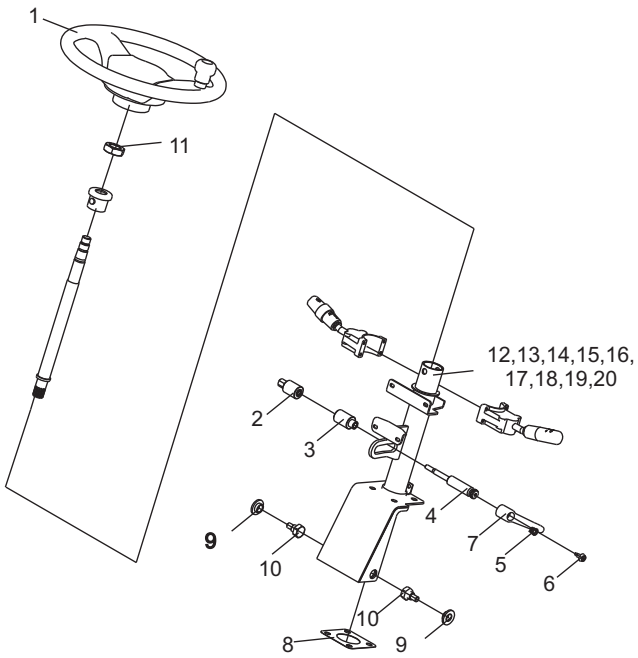

序号 Item No	编码 Code	图号 Part No	零部件名称 Description		数量 Q'ty	备注 Remark
1	60300003779	LG0035DTN.03.01.02	方向盘总成	Steering wheel assy.	1	
2	60700002271	LG0035DTN.03.01-007	螺母	Nut	1	KM914-12011
3	60700002278	LG0035DTN.03.01-006	套管	Thimble	1	KM914-12031
4	60700002276	LG0035DTN.03.01-005	锁紧螺杆	Locknut stud	1	H2MD4-12071
5	60700002249	LG0035DTN.03.01-004	弹簧	Spring	1	G27Z4-12031D
6	60700002270	LG0035DTN.03.01-003	螺钉	Screw	1	G27Z4-12031C
7	60700002275	LG0035DTN.03.01-002	手柄	Handle	1	G27Z4-12031A
8	60700002279	LG0035DTN.03.01-001	调整垫	Adjustment gasket	1	
9	30003122305	LG0030D.03.01-007	衬套	Bushing	2	
10	30003111110	LG0030D.03.01-006	螺栓	Bolt	2	
11A	60800000393	LG0035DTN.03.01.01	转向管柱总成	Steering cloumn	1	
11	51309000719	GBT6171	螺母M16×1.5	NutM16×1.5	1	
12	60700002252	LG0035DTN.03.01.01-001	导电圈	Conducting ring	1	H3QA4-12011
13	51158110404	GBT818	螺钉M3×8	Screw M3×8	2	
14	51117170303	GBT65	螺钉M5×10	Screw M5×10	2	
15	60700002255	LG0035DTN.03.01.01-002	隔套	Spacer	1	H3QA4-12021
16	60700002288	LG0035DTN.03.01.01.01	转向支架	Steering bracket	1	
17	60700002248	LG0035DTN.03.01.01-004	传动轴	Drive shaft	1	

图24/FIG.24

转向操纵总成/ Steering control assy.

A	CPYD20XH06
B	CPYD25XH06
C	CPYD30XH06
D	CPYD35XH06
E	CPCD20XX33
F	CPCD25XX33
G	CPCD30XX33
H	CPCD35XX33

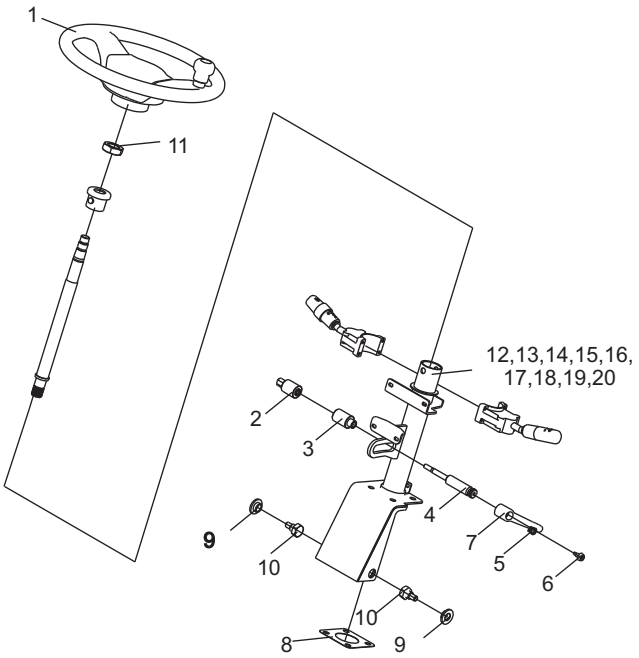

序号 Item No	编码 Code	图号 Part No	零部件名称 Description	数量 Q'ty	备注 Remark
18	60700002267	LG0035DTN.03.01.01-003	喇叭线套 Horn wire sheath	1	
19	51453200107	GBT894.1	挡圈20 Snap ring	1	
20	52196001601	GBT276	轴承61904-Z Bearing 61094Z	1	

图25/FIG.25

转向桥总成/ Steering axle assy.

A	CPYD20XH06
B	CPYD25XH06
C	CPYD30XH06
D	CPYD35XH06
E	CPCD20XX33
F	CPCD25XX33
G	CPCD30XX33
H	CPCD35XX33

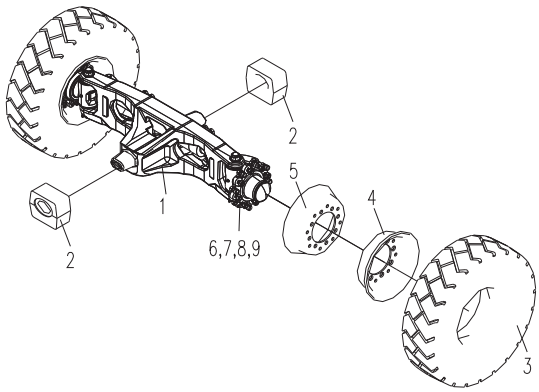

序号 Item No	编码 Code	图号 Part No	零部件名称 Description	数量 Q'ty	备注 Remark
1	60500000095	LG0035DTN.03.02.01	转向桥总成 Steering axle assy.	1	
2	30003109004	30D-0311001	减震垫 Damping cushion	2	
3	60205000169	LG0015D.02.01.01	轮胎总成6. 5-10-10PR Tire assy.	1	
4	60205000157	LG0030D.03.03.01	外轮辋5. 00F-10 Outer rim	1	
5	60205000021	LG0030D.03.03.03	内轮辋5. 00F-10 Inner rim	1	
6	30003111103	30D-0321001	螺栓 Bolt	8	
7	51401110107	GB/T93	垫圈12 Washer 12	8	
8	51421110115	GB/T97.1	垫圈12 Washer 12	8	
9	51307001119	GB/T6170	螺母M12 Nut M12	8	

图26/FIG.26 转向桥/Steering axle(100008)

A	CPYD20XH06
B	CPYD25XH06
C	CPYD30XH06
D	CPYD35XH06
E	CPCD20XX33
F	CPCD25XX33
G	CPCD30XX33
H	CPCD35XX33

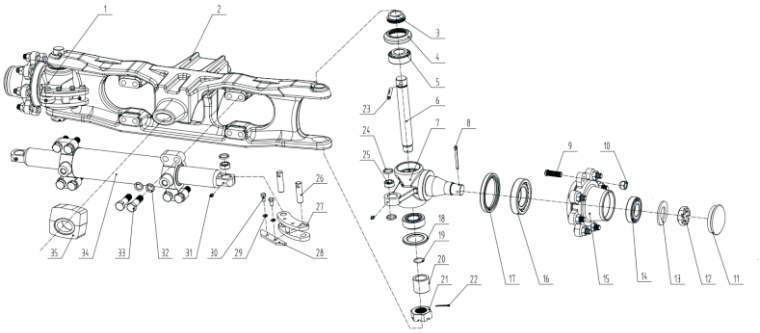

序号 Item No	编码 Code	图号 Part No	零部件名称 Description		数量 Q'ty	备注 Remark
A		Z03A1-1000B	转向桥总成	Steering axle assy.	1	
1		G27Z4-33201	左转向节总成	Left steering knuckle assy.	1	
2		Z03A1-10200	转向桥体总成	Steering axle body assy.	1	
3		G27Z4-33051	隔套	Spacer	2	
4		264973	密封圈	Seal ring	2	
5		Z-33206	轴承33206	Bearing	4	
6		G24Z4-33031CQ	转向节主销	Steering knuckle main pin	2	
7		G27Z4-33301	右转向节	Right knuckle	1	
8		B3010-6P350	销6. 3×50	Pin	2	
9		23654-32041B	轮毂螺栓/白锌	Wheel hub bolt	16	
10		23654-34051B	轮毂螺母/白锌	Wheel bub nut	16	
11		1218-10200	轮毂盖	Wheel hub cover	2	
12		A21B4-32311	螺母M30×2	Nut	2	
13		G27Z4-30711	垫圈	Washer	2	
14		Z-30207	轴承30207	Bearing	2	
15		A21B43-32241	轮毂	Wheel hub	2	
16		Z-30211	轴承30211	Bearing	2	
17		Z6301-08524	橡胶油封B85×110×120	Rubber oil seal	2	

图26/FIG.26 转向桥/Steering axle(100008)

A	CPYD20XH06
B	CPYD25XH06
C	CPYD30XH06
D	CPYD35XH06
E	CPCD20XX33
F	CPCD25XX33
G	CPCD30XX33
H	CPCD35XX33

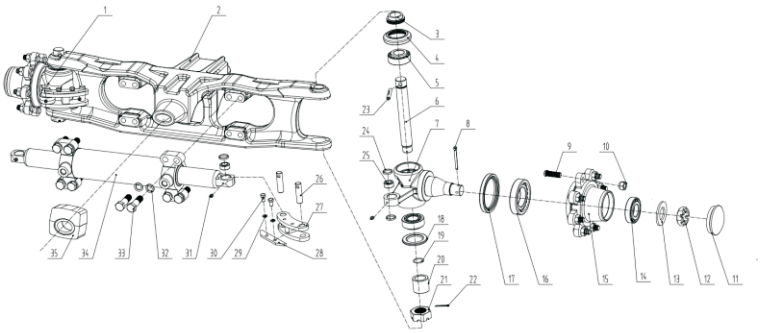

序号 Item No	编码 Code	图号 Part No	零部件名称 Description	数量 Q'ty	备注 Remark
18		G27Z4-33201	密封圈 Seal ring	2	
19		Z6053-02502	O型密封圈25×2. 65 O seal ring	2	
20		G27Z4-33071	衬套 Bushing	2	
21		249289	开槽螺母 Castle nut	2	
22		15225	开口销3. 2×40 Cotter pin	2	
23		226986B	槽销9. 5×57/白锌 Castle pin	2	
24		H24C4-12003	衬套 Bushing	6	
25		Z-GE16ES	ES型向心关节轴承 Joint bearing	4	
26		A21B4-32261AB	销轴/白锌 Pin shaft	4	
27		A21B4-32081B	连杆/白锌 linkage	2	
28		A21B4-32300B	挡板/白锌 Baffle	2	
29		B5050-00008B	弹垫8 /白锌 Spring cushion	4	
30		B0330-08016B	螺栓M8×16/白锌 Bolt M8×16	4	
31		Q700B06	直通式滑脂嘴 Straight lubricating grease	6	
32		B5050-00016B	弹垫16/白锌 Spring washer 16	8	
33		G24Z4-16055B	螺栓M16×55/白锌 Bolt M16×55	8	
34		Z03A1-10400	转向油缸总成 Steering cylinder assy.	1	
35		H24N4-32451	减震块 Shock absorber block	2	

图27/FIG.27 转向轮/Steering wheel

A	CPYD20XH06
B	CPYD25XH06
C	CPYD30XH06
D	CPYD35XH06
E	CPCD20XX33
F	CPCD25XX33
G	CPCD30XX33
H	CPCD35XX33

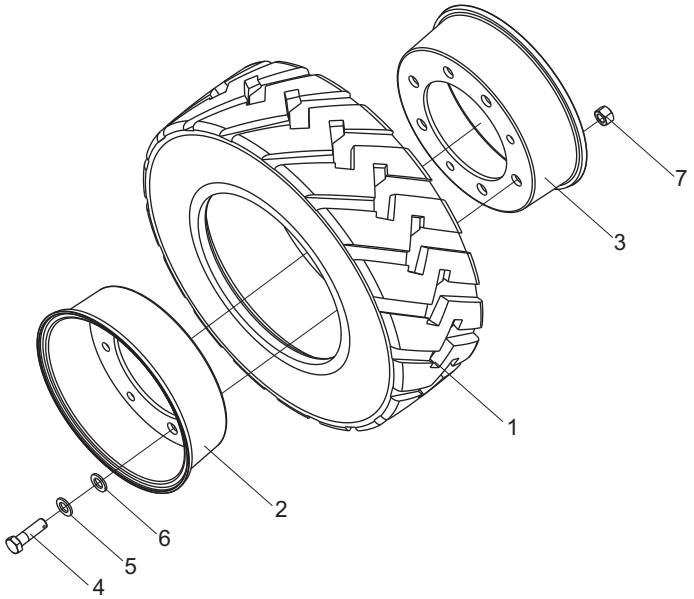

序号 Item No	编码 Code	图号 Part No	零部件名称 Description		数量 Q'ty	备注 Remark
1	60205000169	LG0015D.02.01.01	轮胎总成6. 5-10-10PR	Tire assembly	1	
2	60205000157	LG0030D.03.03.01	内轮辋总成5. 00F-10	Rim assembly	1	
3	60205000021	LG0030D.03.03.03	外轮辋总成5. 00F-10	Rim assembly	1	
4	30003111103	30D-0321001	螺栓	Bolt	8	
5	51401110107	GB/T93	垫圈12	Washer 12	8	
6	51421110115	GB/T97.1	垫圈12	Washer 12	8	
7	51307001119	GB/T6170	螺母M12	Nut M12	8	

图28/FIG.28

行车制动总成/ Service brake assy.

A	CPYD20XH06
B	CPYD25XH06
C	CPYD30XH06
D	CPYD35XH06
E	CPCD20XX33
F	CPCD25XX33
G	CPCD30XX33
H	CPCD35XX33

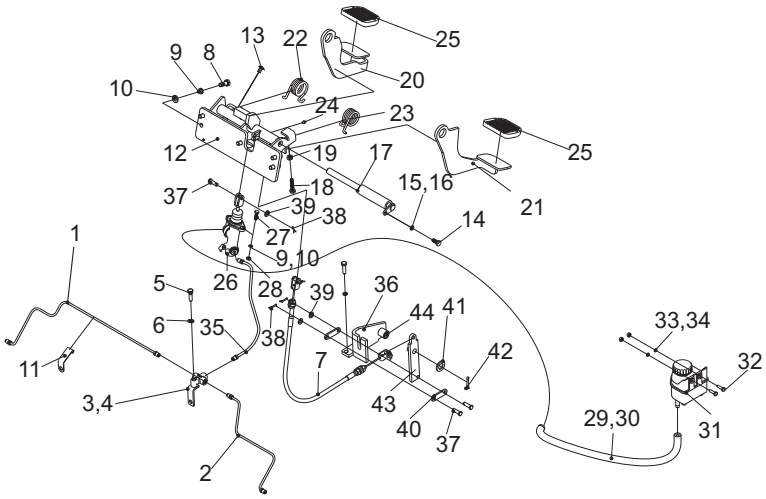

序号 Item No	编码 Code	图号 Part No	零部件名称 Description		数量 Q'ty	备注 Remark
1	60300016562	CPYD25XH06.06.01	钢管焊合	Steel tube weldment	1	
	60700002253	LG0035DTN.06.01	钢管焊合	Steel tube weldment	1	
2	60300016564	CPYD25XH06.06.02	钢管焊合	Steel tube weldment	1	
	60700002254	LG0035DTN.06.02	钢管焊合	Steel tube weldment	1	
3	60700002274	LG0035DTN.06-001	三通接头	T-connector	1	
4	30003115015	LG0035DTN.06-002	支架	Bracket	1	
5	51204091214	GB/T5783	螺栓M8×30	Bolt M8×30	1	
6	51401090107	GB/T93	垫圈8	Washer 8	1	
7	60800000392	LG0035DTN.06.03	拉索总成	Cable assy.	1	
8	51204101114	GB/T5783	螺栓M10×25	Bolt M10×25	7	
9	51401100107	GB/T93	垫圈10	Washer 10	9	
10	51421100115	GB/T97.1	垫圈10	Washer 10	9	
11	60700002265	LG0035DTN.06-003	管夹	Clip	1	
12A	60800000390	LG0035DTN.06.04	行车制动总成	Service brake assy.	1	含12-22
12	60700002283	LG0035DTN.06.04.01	支架焊合	Bracket weldment	1	
13	30006117300	LG0030DⅢ.06.01-003	缓冲垫	Damping cushion	1	
14	51204090914	GB/T5783	螺栓M8×16	Bolt M8×16	1	
15	51401090107	GB/T93	垫圈8	Washer 8	1	

图28/FIG.28

行车制动总成/ Service brake assy.

A	CPYD20XH06
B	CPYD25XH06
C	CPYD30XH06
D	CPYD35XH06
E	CPCD20XX33
F	CPCD25XX33
G	CPCD30XX33
H	CPCD35XX33

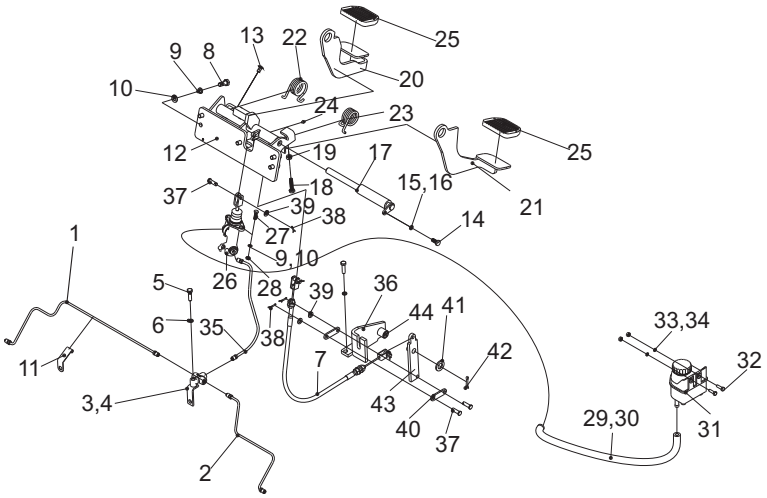

序号 Item No	编码 Code	图号 Part No	零部件名称 Description		数量 Q'ty	备注 Remark
16	51421090115	GB/T97.1	垫圈8	Washer 8	1	
17	60700002281	LG0035DTN.06.04.02	销轴焊合	Pin shaft weldment	1	
18	51204091414	GB/T5783	螺栓M8×40	Bolt M8×40	1	
19	51307000919	GB/T6170	螺母M8	Nut M8	1	
20	60700002289	LG0035DTN.06.04.03	转轴焊合	Rotary shaft weldment	1	
21	60700002290	LG0035DTN.06.04.04	转轴焊合	Rotary shaft weldment	1	
22	60700002272	LG0035DTN.06.04-002	扭簧	Tortion spring	1	
23	60700002273	LG0035DTN.06.04-003	扭簧	Tortion spring	1	
24	56203000301	JB/T7940.2	油杯90° M10×1	Oil cup 90°M10×1	2	
25	60700002277	LG0035DTN.06.04-001	踏板垫	Pedal gasket	2	
26	60200000553	LG0035BⅡ.06.01.01	制动总泵总成	Brake wheel cylinder assy.	1	
27	51204101214	GB/T5783	螺栓M10×30	Bolt M10×30	2	
28	51307001019	GB/T6170	螺母M10	Nut M10	2	
29	30001109223	LG0100DT.01.04-006	胶管Φ10×3. 5-L=610	Hose Φ10×3.5-L=610	1	
30	56171001301	JB/T8870	喉箍d20（12~20）	Hoop d20(12~20)	2	
31	60700002282	LG0035DTN.06.05	油杯总成	Oil cup assy.	1	
32	51204081014	GB/T5783	螺栓M6×20	Bolt M6×20	2	
33	51401080107	GB/T93	垫圈6	Washer 6	2	

图28/FIG.28

行车制动总成/ Service brake assy.

A	CPYD20XH06
B	CPYD25XH06
C	CPYD30XH06
D	CPYD35XH06
E	CPCD20XX33
F	CPCD25XX33
G	CPCD30XX33
H	CPCD35XX33

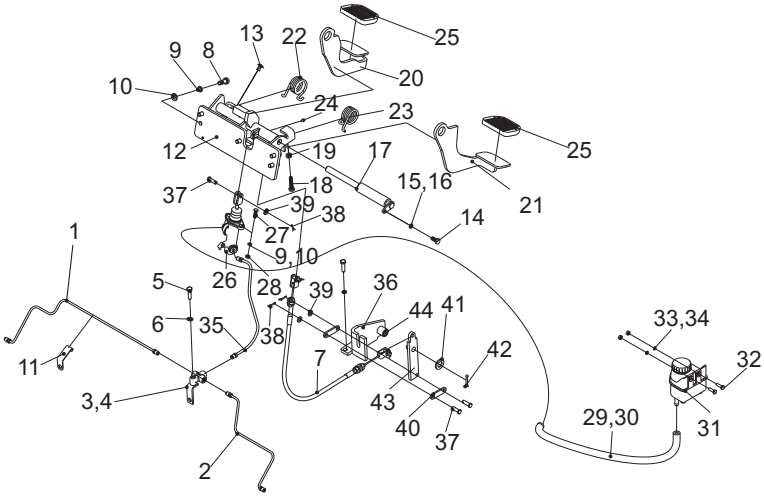

序号 Item No	编码 Code	图号 Part No	零部件名称 Description		数量 Q'ty	备注 Remark
34	51421080115	GB/T97.1	垫圈6	Washer 6	2	
35	60700002286	LG0035DTN.06.06	制动管总成	Brake pipe assy.	1	
36A	60700002285	LG0035DTN.06.07	支架总成	Bracket assy.	1	
36	60700002284	LG0035DTN.06.07.01	支架焊合	Bracket weldment	1	
37	51511051102	GB/T882	销B8×26	Pin B8×26	2	
38	51512070801	GB/T91	销2. 5×16	Pin 2.5×16	2	
39	51421090115	GB/T97.1	垫圈8	Washer 8	2	
40	60700002268	LG0035DTN.06.07-001	连接板	Connecting plate	2	
41	51421130115	GB/T97.1	垫圈16	Washer 16	1	
42	51512081201	GB/T91	销3. 2×25	Pin 3.2×25	1	
43	60700002269	LG0035DTN.06.07.02	连接板焊合	Connecting plate weldment	1	
44	52011000101	GB/T12613.1	滑动轴承16×18×25	Slide bearing 16×18×25	1	

图29/FIG.29

停车制动操纵/ Parking brake control

A	CPYD20XH06
B	CPYD25XH06
C	CPYD30XH06
D	CPYD35XH06
E	CPCD20XX33
F	CPCD25XX33
G	CPCD30XX33
H	CPCD35XX33

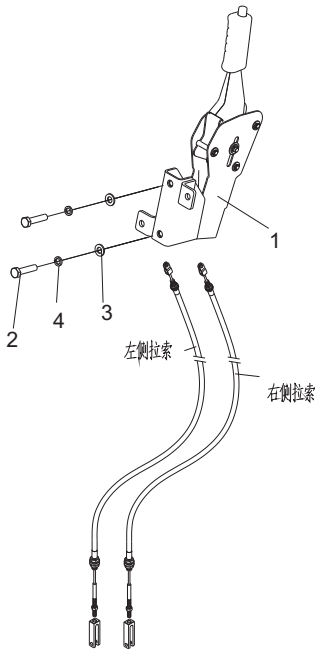

序号 Item No	编码 Code	图号 Part No	零部件名称 Description	数量 Q'ty	备注 Remark
1	60800000400	LG0035DTN.07.02	手制动手柄总成 Parking brake assembly	1	
2	51204101514	GB/T5783	螺栓M10×45 Bolt M10×45	2	
3	51421100115	GB/T97.1	垫圈10 Washer 10	2	
4	51401100107	GB/T93	垫圈10 Washer 10	2	

图30/FIG.30 车架/Chassis

A	CPYD20XH06
B	CPYD25XH06
C	CPYD30XH06
D	CPYD35XH06
E	CPCD20XX33
F	CPCD25XX33
G	CPCD30XX33
H	CPCD35XX33

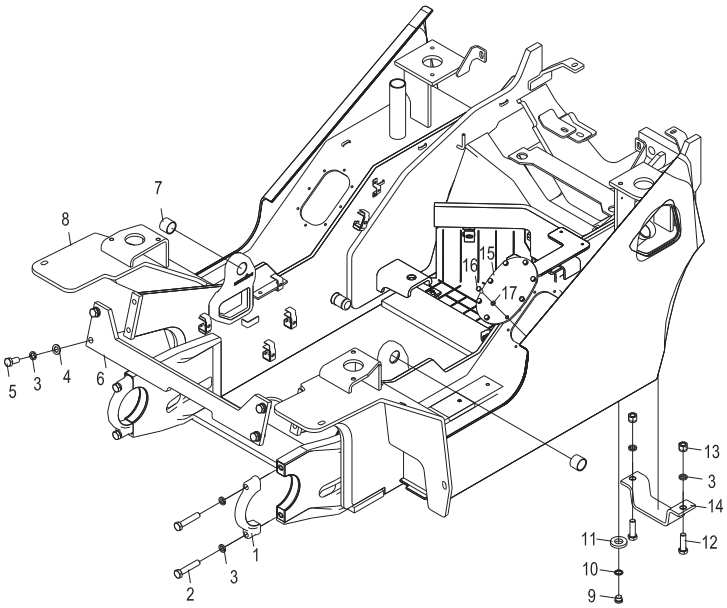

序号 Item No	编码 Code	图号 Part No	零部件名称 Description	数量 Q'ty	备注 Remark
1	30082118500	LG0030D.10-005	端盖 End cover	2	
2	51210132214	GB/T5785	螺栓M16×1.5×80 Bolt M16×1.5×80	4	
3	51401130107	GB/T93	垫圈16 Washer 16	12	
4	51421130115	GB/T97.1	垫圈16 Washer 16	4	
5	51207131314	GB/T5786	螺栓M16×1.5×35 Bolt M16×1.5×35	4	
6	30008022303	LG0035DTN.08.02	横板焊合 Transverse plate weldment	1	
7	52011003702	GB/T12613.1	滑动轴承35×39×30 Slide bearing	2	
8	30008050489	CPYD25XH06.08.01	车架焊合 Chassis weldment	1	AC
	30008050372	CPYD30XH06.08.01	车架焊合 Chassis weldment	1	CD
	30008050496	CPCD25XX33.08.01	车架焊合 Screw plug	1	EF
	30008050492	CPCD30XX33.08.01	车架焊合 Combination washer 30	1	GH
9	56302001202	JB/ZQ4444	螺塞M30×1.5 Magnet	2	
10	56147011701	JB/T982	组合垫圈30 Bolt M16×55	2	
11	30008154200	LG0060DT.08-003	磁铁70×32×15 Nut M16	2	
12	51204135014	GB/T5783	螺栓M16×55 Mounting plate	4	
13	51341000919	GB/T889.1	螺母M16 Baffle plate	4	
14	30008105301	30D-0800024	安装板 End cover	2	
15	30008107393	CPYD306H06.08-001	盖板 Gasket	1	
16	51204091014	GB/T5783	螺栓M8×20 Rubber gasket	8	
17	56147012401	JB/T982	组合垫圈8 Gasket	8	

图31/FIG.31

覆盖件系统/ Outer panel system

A CPYD20XH06
B CPYD25XH06
C CPYD30XH06
D CPYD35XH06
E CPCD20XX33
F CPCD25XX33
G CPCD30XX33
H CPCD35XX33

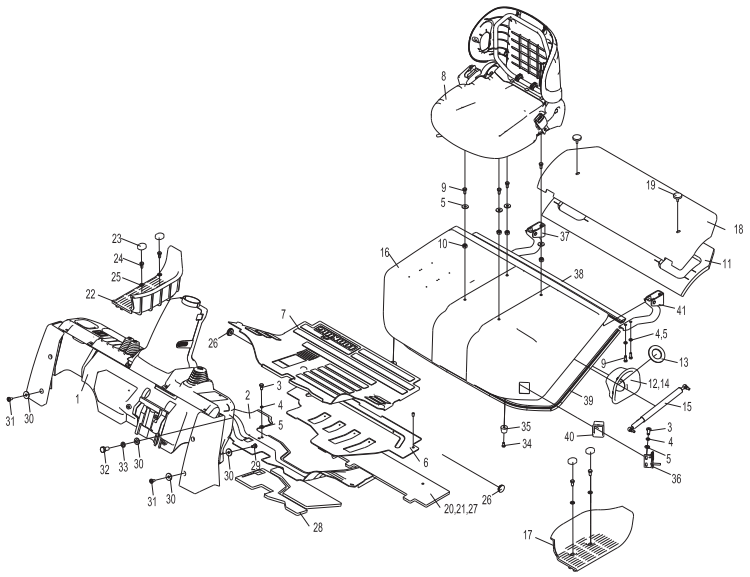

序号 Item No	编码 Code	图号 Part No	零部件名称 Description		数量 Q'ty	备注 Remark
1	60700012895	CPYD30XH06.09.01	仪表台总成	Instrument panel weldment	1	
2	60700002199	LG0035DTN.09-001	前底板	Front bottom plate	1	
3	51204091014	GB/T5783	螺栓M8×20	Bolt M8×20	14	
4	51401090107	GB/T93	垫圈8	Washer 8	18	
5	51420090121	GB/T96.1	垫圈8	Washer 8	18	
6	60700002825	LG0035DTN.09.04	后底板焊合	Rear bottom plate	1	
7	60700002364	LG0035DTN.09-005	橡胶垫	Rubber gasket	1	
8	60700003110	LG0035DTN.09.05	座椅总成	Seat assy.	1	
9	51204091114	GB/T5783	螺栓M8×25	Bolt M8×25	9	
10	51341000519	GB/T889.1	螺母M8	Nut M8	8	
11	60700002833	LG0035DTN.09-014	吸声块	Sound absorber block	1	
12	60700012844	CPYD30XH06.09-002	护罩	Hood	1	
13	60700002831	LG0035DTN.09-012	橡胶塞	Rubber plug	1	
14	60980000847	30D-0131400	加油口盖	Oil filler cap	1	
15	60700002812	LG0035DTN.09.02	气弹簧	Air spring	1	含3-5, 9, 33-40
16A	60700012876	CPD30XFL.09.02	机罩总成	Engine hood assy.	1	总成带
16	60700012877	CPD30XFL.09.02.01	机罩焊合	Engine hood weldment	1	
17	60700002207	LG0035DTN.09-004	踏板	Pedal	1	

图31/FIG.31

覆盖件系统/ Outer panel system

A	CPYD20XH06
B	CPYD25XH06
C	CPYD30XH06
D	CPYD35XH06
E	CPCD20XX33
F	CPCD25XX33
G	CPCD30XX33
H	CPCD35XX33

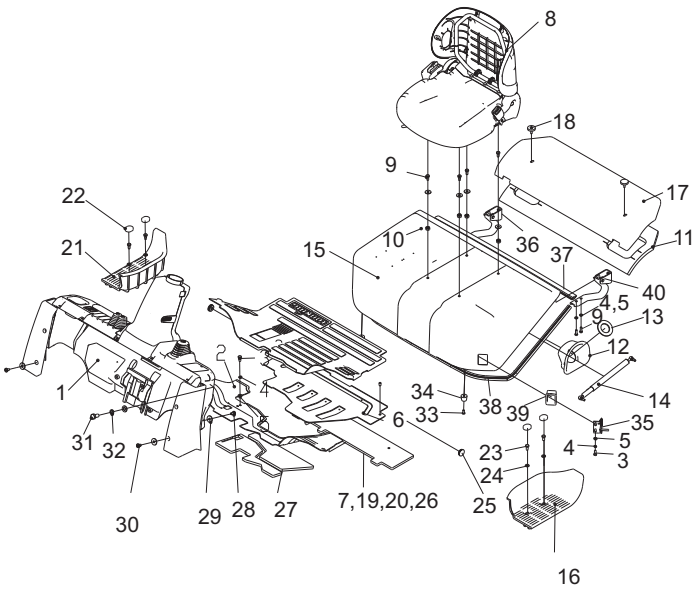

序号 Item No	编码 Code	图号 Part No	零部件名称 Description		数量 Q'ty	备注 Remark
18	60700012843	CPYD30XH06.09-001	盖板	Cover plate	1	
	60700013058	CPCD30XR21.09-001	盖板	Cover plate	1	
19	60700002761	LG0025BⅥ.09-005	螺钉	Screw	2	
20	60700002367	LG0035DTN.09-008	吸声块	Sound absorber block	1	
21	60700002837	LG0035DTN.09-015	吸音块	Sound absorber block	2	
22	60700002206	LG0035DTN.09-003	踏板	Pedal	1	
23	60700002830	LG0035DTN.09-011	橡胶塞	Rubber plug	2	
24	51204101014	GB/T5783	螺栓M10×20	Bolt M10×20	4	
25	51421100115	GB/T97.1	垫圈10	Washer 10	4	
26	60700002829	LG0035DTN.09-010	橡胶盖	Rubber cover	2	
27	60700002375	LG0035DTN.09-009	吸声块	Sound absorber block	1	
28	60700002366	LG0035DTN.09-007	吸声块	Sound absorber block	1	
29	51158190504	GB/T818	螺钉M6×16	Screw M6×16	2	
30	51421080115	GB/T97.1	垫圈6	Washer 6	11	
31	51158190304	GB/T818	螺钉M6×12	Screw M6×12	9	
32	51204080914	GB/T5783	螺栓M6×16	Screw M6×16	2	
33	51401080107	GB/T93	垫圈6	Washer 6	4	
34	51204090914	GB/T5783	螺栓M8×16	Bolt M8×16	2	总成带

图31/FIG.31

覆盖件系统/ Outer panel system

A	CPYD20XH06
B	CPYD25XH06
C	CPYD30XH06
D	CPYD35XH06
E	CPCD20XX33
F	CPCD25XX33
G	CPCD30XX33
H	CPCD35XX33

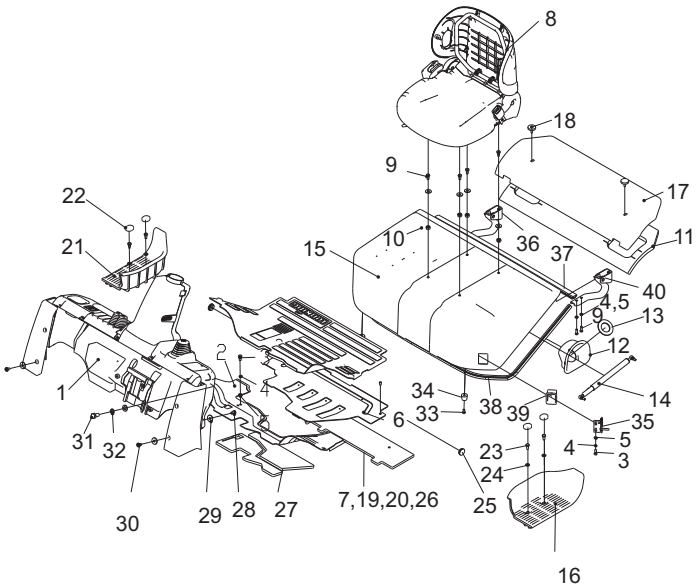

序号 Item No	编码 Code	图号 Part No	零部件名称 Description	数量 Q'ty	备注 Remark
35	60700002824	LG0035DTN.09.03-001	减震垫 Rubber gasket	2	总成带
36	30009047306	LG0075DTG.09.01.02	锁扣总成 Lock assy.	1	总成带
37	60700003146	LG0035DTN.09.03.04	铰链总成 Hinge assy.	1	
38	30009159202	LG0030DIII.09.02.04	密封条 Seal stripe	1	总成带
39	30009159201	LG0030DIII.09.02.03	密封条 Seel stripe	1	
40	30009104100	LG0075DTG.09.01-004	方盒 Square box	1	
41	60700002823	LG0035DTN.09.03.02	铰链总成 Hinge assy.	1	

图32/FIG.32

门架(基本型)/ Mast (normal mast)

A	CPYD20XH06
B	CPYD25XH06
C	CPYD30XH06
D	CPYD35XH06
E	CPCD20XX33
F	CPCD25XX33
G	CPCD30XX33
H	CPCD35XX33

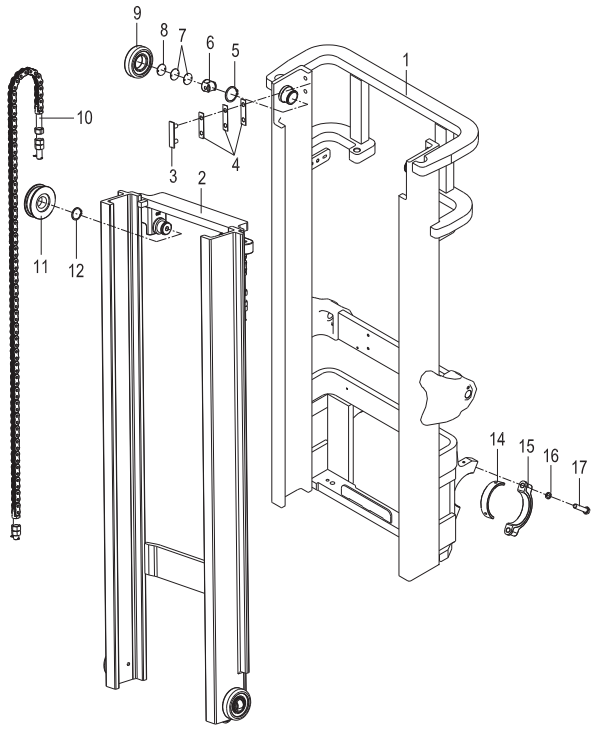

序号 Item No	编码 Code	图号 Part No	零部件名称 Description		数量 Q'ty	备注 Remark
1	30082090003	CPYD25XH06.10.01	外门架焊合	Outer mast assy.	1	2-2.5t
	30082085086	CPYD30XH06.10.01	外门架焊合	Outer mast assy.	1	3t
	30082085100	CPYD35XH06.10.01	外门架焊合	Outer mast assy.	1	3.5t
2	30082082243	LG0025D5.10.02	内门架焊合	Inner mast assy.	1	2-2.5t
	30082081324	LG0030D5.10.02	内门架焊合	Inner mast assy.	1	3t
	30082081338	LG0035D5.10.02	内门架焊合	Inner mast assy.	1	3.5t
3	30082185100	LG0030D.10-007	滑块	Side roller	2	
4	30082154800	LG0030D.10-008	调整垫	Adjustment gasket	2	0.5mm
	30082154805	LG0030D.10-008	调整垫	Adjustment gasket	2	1mm
	30082154806	LG0030D.10-008	调整垫	Adjustment gasket	2	2mm
5	51453420107	GB/T894.1	挡圈55	Snap ring 55	4	
6	60900014777	LG0035DE.10-002	侧滚轮	Side Roller	4	
7	60700003126	LG0030BVI.10-003	调整垫	Adjustment gasket	4	1mm
	60700003216	LG0030BVI.10-003	调整垫	Adjustment gasket	4	0.5mm
8	60700003127	LG0030BVI.10-004	橡胶垫	Rubber gasket	4	
9	30082141008	LG0030D.10-003	滚轮Φ119. 6	RollerΦ119.6	4	
10	60600009204	LG0030D5.10B.03	链条总成LH1623(77节)	Chain assy.	2	2-2.5t
	60600009204	LG0030D5.10.10	链条总成LH1623(77节)	Chain assy.	2	3t

图32/FIG.32

门架(基本型)/ Mast (normal mast)

A	CPYD20XH06
B	CPYD25XH06
C	CPYD30XH06
D	CPYD35XH06
E	CPCD20XX33
F	CPCD25XX33
G	CPCD30XX33
H	CPCD35XX33

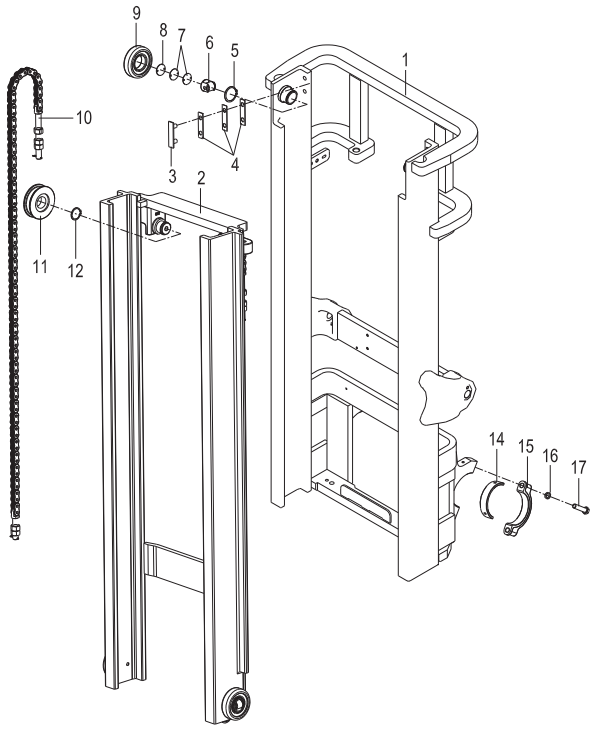

序号 Item No	编码 Code	图号 Part No	零部件名称 Description		数量 Q'ty	备注 Remark
	60600008895	LG0035D5.10.06	链条总成LH1634(81节)	Chain assy.	2	3.5t
11	60700003474	LG0030DE.10B-001	链轮	Chain wheel	2	2-2.5t
	60700003474	LG0030DE.10B-001	链轮	Chain wheel	2	3t
	60700003462	LG0035DE.10B-001	链轮	Chain wheel	2	3.5t
12	51453370107	GB/T894.1	挡圈45	Snap ring 45	2	
13	56201000301	JB/T7940.1	油杯M10×1	Oil cup	2	
14	60700009107	LG0030D5.10-003	轴衬	Shaft sleeve	2	
15	30082118500	LG0030D.10-005	端盖	End cover	2	
16	51401130107	GB/T93	垫圈16	Washer 16	4	
17	51207132014	GB/T5786	螺栓M16×1.5×70	Bolt M16×1.5×70	4	

门架参数表(基本型2-2. 5t)/Mast (normal mast)

编　码 Code	起升高度 Lifting H	内门架 Inner mast	外门架 Outer mast	链条编码 Code,chain	链条节数 Chain,leaf	备　注 Remark
30082910389	2000	30082082260	30082090000	–	57	
/	2500	30082082241	30082090001	60600009202	67	
30082910391	2700	30082082242	30082090002	60600009203	71	
30082910392	3000	30082082243	30082090003	60600009204	77	标准
30082910393	3300	30082082244	30082090004	60600009205	83	
30082910394	3500	30082082245	30082090005	60700009093	87	
30082910395	3600	30082082246	30082090006	60600009206	91	
30082910396	4000	30082082247	30082090007	60700009095	99	
30082910397	4300	30082082248	30082090008	60700009096	103	
30082910398	4500	30082082249	30082090009	60700009097	109	
30082910399	4800	30082082250	30082090010	60600009316	113	
30082910400	5000	30082082251	30082090011	60700009099	117	
30082910401	5500	30082082252	30082090012	60700009100	129	
30082910402	6000	30082082253	30082090013	60700009100	139	

门架参数表(基本型)/Mast (normal mast)

3t

编　码 Code	起升高度 Lifting H	内门架 Inner mast	外门架 Outer mast	链条编码 Code,chain	链条节数 Chain,leaf	备　注 Remark
-	2000	30082082257	30082085083	60600009199	57	
-	2500	30082081322	30082085084	60600009202	67	
-	2700	30082081323	30082085085	60600009203	71	标准
30082910293	3000	30082081324	30082085086	60600009204	77	
-	3300	30082081325	30082085087	60600009205	83	
-	3500	30082081326	30082085088	60700009093	87	
-	3700	30082081327	30082085089	60600009206	91	
-	4000	30082081328	30082085090	60700009095	99	
-	4300	30082081329	30082085091	60700009096	103	
-	4500	30082081330	30082085092	60700009097	109	
-	4800	30082081331	30082085093	60600009316	113	
-	5000	30082081332	30082085094	60700009099	117	
-	5500	30082081333	30082085095	60700009100	129	
-	6000	30082081334	30082085096	60700009101	139	

门架参数表(基本型)/Mast (normal mast)

3.5t

编　码 Code	起升高度 Lifting H	内门架 Inner mast	外门架 Outer mast	链条编码 Code,chain	链条节数 Chain,leaf	备　注 Remark
-	2000	30082084750	30082085097	60600009188	61	
-	2500	30082083918	30082085098	60600008893	71	
-	2700	30082083979	30082085099	60600008894	75	标准
30082910294	3000	30082083980	30082085100	60600008895	81	
-	3300	30082083981	30082085101	60600008896	87	
-	3500	30082083982	30082085102	60600008897	91	
-	3700	30082083983	30082085103	60600008898	95	
-	4000	30082083984	30082085104	60600008899	103	
-	4300	30082083985	30082085105	60600008900	107	
-	4500	30082083986	30082085106	60600009317	113	
-	4800	30082083987	30082085107	60600008902	117	
-	5000	30082083988	30082085108	60600008903	123	
-	5500	30082083989	30082085109	60600008904	135	
-	6000	30082083990	30082085110	60600008905	145	

图33/FIG.33

货叉及货叉架(基本型)/ Fork& fork carrier(normal mast)

A CPYD20XH06
B CPYD25XH06
C CPYD30XH06
D CPYD35XH06
E CPCD20XX33
F CPCD25XX33
G CPCD30XX33
H CPCD35XX33

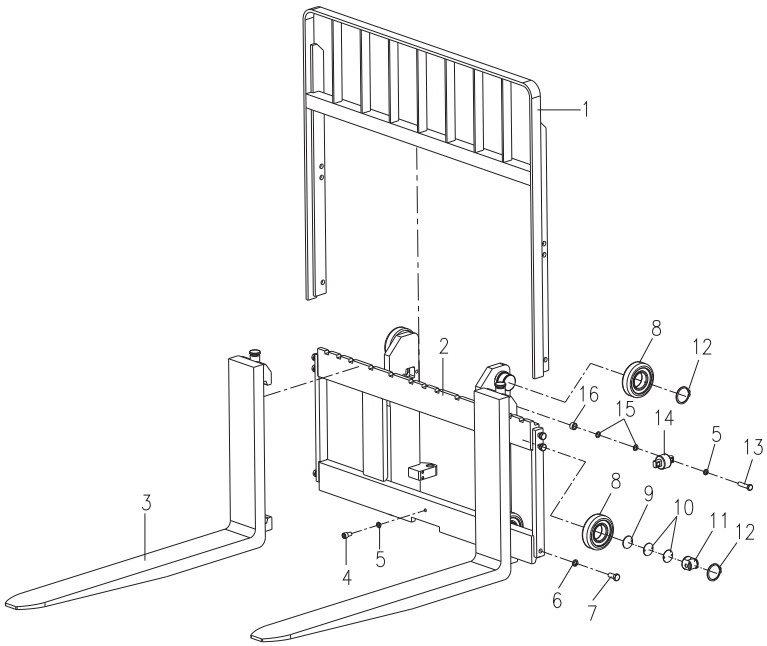

序号 Item No	货叉编码2-2.5t Fork code	货叉规格2-2.5t Fork size	货叉编码3t Fork code	货叉规格3t Fork size	货叉编码3.5t Fork code	货叉规格3.5t Fork size	备注 Remark
1	30082081208	1070X122X45	30082081208	1070X122X45	30082081216	1070X122X50	标准货叉
2	30082081209	1220X122X45	30082081209	1220X122X45	30082081217	1220X122X50	
3	30082081210	1370X122X45	30082081210	1370X122X45	30082081218	1370X122X50	
4	30082081211	1520X122X45	30082081211	1520X122X45	30082081219	1520X122X50	
5	30082081212	1670X122X45	30082081212	1670X122X45	30082081220	1670X122X50	
6	30082081213	1820X122X45	30082081213	1820X122X45	30082081221	1820X122X50	
7	30082081214	1900X122X45	30082081214	1900X122X45	30082081222	1900X122X50	
8	30082081215	2000X122X45	30082081215	2000X122X45	30082081223	2000X122X50	

图33/FIG.33

货叉及货叉架(基本型)/ Fork& fork carrier(normal mast)

A	CPYD20XH06
B	CPYD25XH06
C	CPYD30XH06
D	CPYD35XH06
E	CPCD20XX33
F	CPCD25XX33
G	CPCD30XX33
H	CPCD35XX33

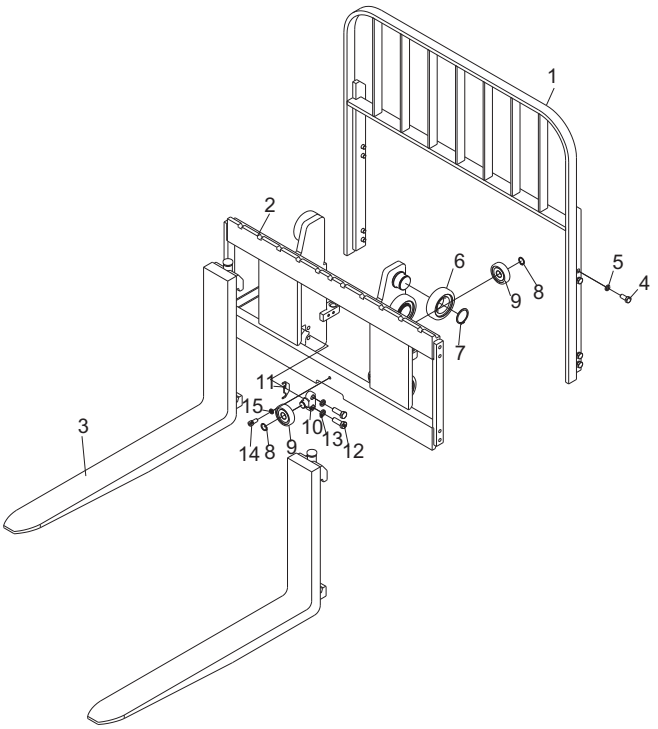

序号 Item No	编码 Code	图号 Part No	零部件名称 Description		数量 Q'ty	备注 Remark
1	30082083608	LG0025BVI.10.04	挡货架焊合	Load backrest weldment	1	2-2.5t
	30082083617	LG0030D.10III.11	挡货架焊合(宽1100)	Load backrest weldment	1	3-3.5t
2	30082080151	LG0025D5.10.03	货叉架焊合(宽1040)	Fork carrier weldment	1	2-2.5t
	30082080930	LG0030D5.10.03	货叉架焊合(宽1100)	Fork carrier weldment	1	3t
	30082080947	LG0035D5.10.03	货叉架焊合(宽1100)	Fork carrier weldment	1	3.5t
3	30082081201	LG0025D.10.03	货叉总成	Fork assembly	2	2-2.5t
	30082081208	LG0030D.10.03	货叉总成	Fork assembly	2	3t
	30082081216	LG0035D.10.02	货叉总成	Fork assembly	2	3.5t
4	51139230105	GB/T70.1	螺钉M12×20	Screw M12×20	1	
5	51401110107	GB/T93	垫圈12	Washer 12	5	
6	51207121214	GB/T5786	螺栓M14×1.5×30	Bolt M14×1.5×30	6	
7	51401120107	GB/T93	垫圈14	Washer 14	6	
8	30082141008	LG0030D.10-003	滚轮Φ119.6	Roller Φ119.6	6	
9	60700003127	LG0030BVI.10-004	橡胶垫	Rubber gasket	4	
10	60700003126	LG0030BVI.10-003	调整垫	Adjustment gasket	4	1mm
	60700003216	LG0030BVI.10-003	调整垫	Adjustment gasket	4	0.5mm
11	60900014777	LG0035DE.10-002	侧滚轮	Side Roller	4	
12	51453420107	GB/T894.1	挡圈55	Snap ring 55	6	

图33/FIG.33

货叉及货叉架(基本型)/ Fork& fork carrier(normal mast)

A	CPYD20XH06
B	CPYD25XH06
C	CPYD30XH06
D	CPYD35XH06
E	CPCD20XX33
F	CPCD25XX33
G	CPCD30XX33
H	CPCD35XX33

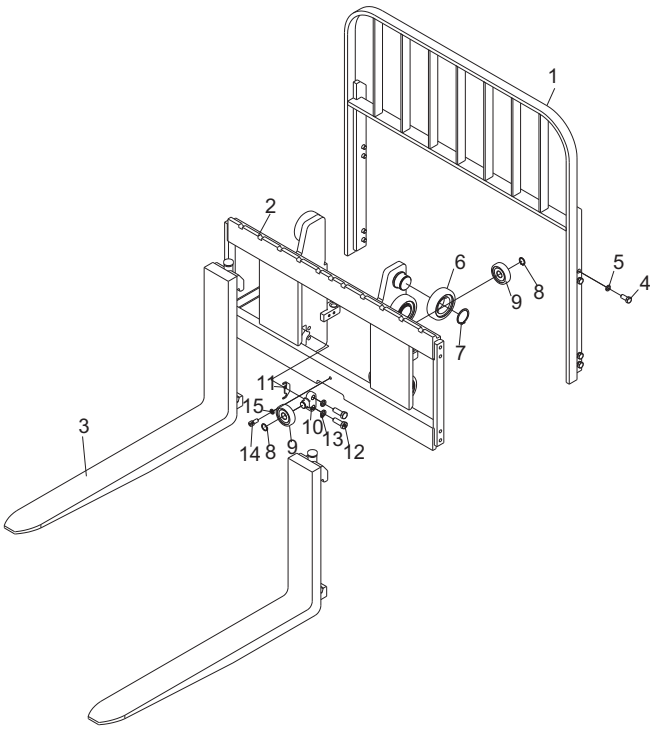

序号 Item No	编码 Code	图号 Part No	零部件名称 Description	数量 Q'ty	备注 Remark
13	51204111614	GB/T5783	螺栓M12×50 Screw M12×50	4	
14	30082081402	LG0035DIII.10.05	滚轮总成 Roller assy.	2	
15	30086118200	LG0060DT.10-008	垫片 Gasket	4	
	30086118201	LG0060DT.10-008	垫片 Gasket	4	
16	30086106401	LG0045D.10-008	垫圈 Washer	4	

图34/FIG.34

起升油缸(基本型)/ Lift cylinder (normal mast)

A CPYD20XH06
B CPYD25XH06
E CPCD20XX33
F CPCD25XX33

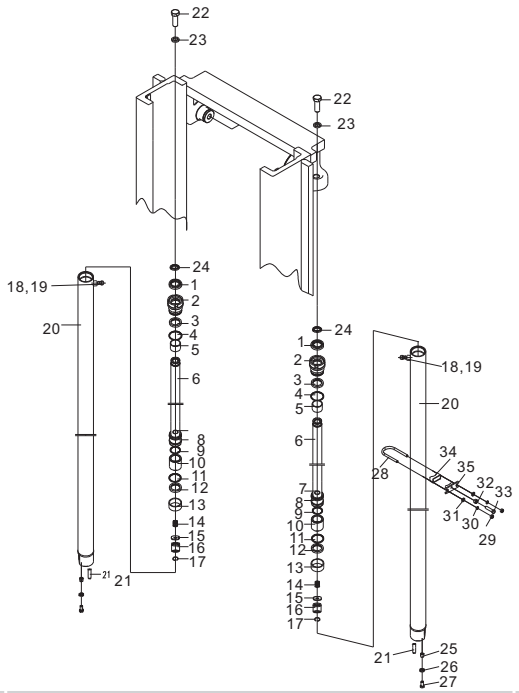

序号 Item No	编码 Code	图号 Part No	零部件名称 Description	数量 Q'ty	备注 Remark
A	16600400900	LGG025SP300H	2. 5起升油缸 Lift cylinder	2	
1	61100000194		防尘圈40×52×7 Wipers	2	
2	36600031220	LGG025SP300H-02	导向套 Guide sleeve	2	
3	56187000601		轴用密封圈40×50×7 IDI-ring d40	2	
4	56900026903	GB/T3452.1	0形圈50. 47×2. 62 O-ring	2	
5	52500000201		钢背轴承40×44×30 Bushing	2	
6	36600883490	LGG025SP300H-01	活塞杆 Rod	2	
7	36600021300	LGG025SP300H-03	活塞 Piston	2	
8	51466070219	GB/T895.1	挡圈30 Snap ring 30	2	
9	56145077904	GB/T3452.1	0形圈40×1. 8 O-ring	2	
10	36600071010	LGG020SP400H-05	间隔套 Spacer	2	
11	56192014901		挡圈40×50×3 Ring	2	
12	56191003701		活塞密封圈50×40×7 U-ring D50	2	
13	56199002201		支承环50×45×9. 7 Wearing	2	
14	36600790200	LGG020SE300H.10	阀总成 Check valve body	2	
15	51421120115	GB/T97.1	垫圈14 Snap ring 14	2	
16	36600060070	LGG030SS450H-05（SZ)	缓冲套 Cushion collar	2	
17	51466070219	GB/T895.1	挡圈30 Snap ring 30	2	

图34/FIG.34

起升油缸(基本型)/ Lift cylinder (normal mast)

A CPYD20XH06
B CPYD25XH06
E CPCD20XX33
F CPCD25XX33

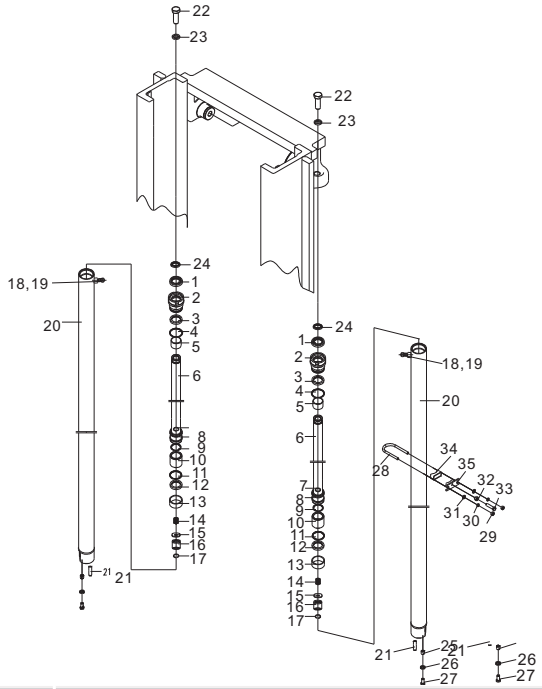

序号 Item No	编码 Code	图号 Part No	零部件名称 Description	数量 Q'ty	备注 Remark
18	56147000101	JB/T982	组合垫圈5 Ring	2	
19	51139171506	GB/T70.1	螺钉M5×6 Screw	2	
20	36600011730	LGG030SS450FH.01	缸体 Tube cylinder	2	按高度选用
21	51513131502	GB/T119.1	圆柱销10×26 Pin	2	
22	51204133714	GB/T5783	螺栓M16×40 Bolt M16×40	2	
23	51401130107	GB/T93	垫圈16 Washer 16	2	
24	30082154801	LG0030D.10-010	调整垫 Adjustment gasket	2	t=0.5mm
	30082154807	LG0030D.10-010	调整垫 Adjustment gasket	2	t=1.0mm
	30082154808	LG0030D.10-010	调整垫 Adjustment gasket	2	t=2.0mm
25	30082135101	LG0030D.10-009	轴套 Shaft sleeve	2	
26	51401110107	GB/T93	垫圈12 Washer 12	2	
27	51207115114	GB/T5786	螺栓M12×1.25×25 Bolt M12×1.25×25	2	
28	60700009108	LG0030D5.10-004	卡箍 Clamp	2	
29	51309000319	GB/T6171	螺母M10×1.25 Nut M10×1.25	4	
30	51401100107	GB/T93	垫圈10 Washer 10	4	
31	51421100115	GB/T97.1	垫圈10 Washer 10	4	
32	51309000519	GB/T6171	螺母M12×1.25 Nut M12×1.25	2	
33	51207115614	GB/T5786	螺栓M12×1.25×50 Bolt M12×1.25×50	2	

图34/FIG.34

起升油缸(基本型)/ Lift cylinder (normal mast)

A CPYD20XH06
B CPYD25XH06
E CPCD20XX33
F CPCD25XX33

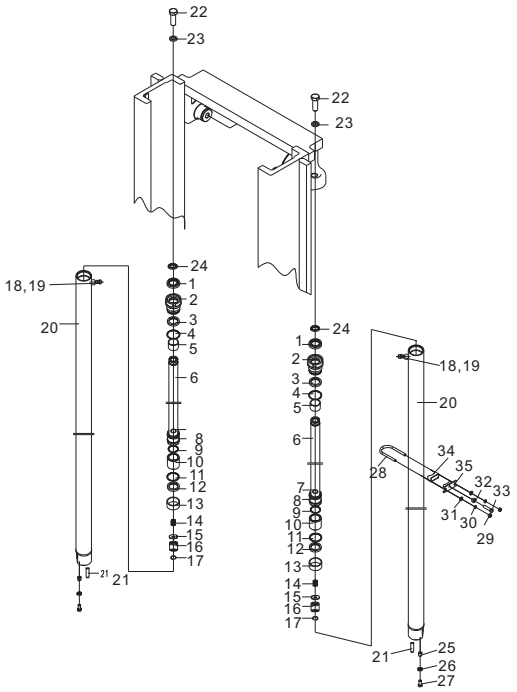

序号 Item No	编码 Code	图号 Part No	零部件名称 Description	数量 Q'ty	备注 Remark
34	30082113900	LG0030D.10-013	橡胶垫 Rubber gasket	2	
35	30082185000	LG0030D.10-012	箍座 Clamp seat	2	

起升油缸参数/Lift cylinder parameter

编码 Code	起升高度 Lifting height	活塞杆 Postion rod	缸体 Cylinder body	备注 Remark
16600400910	2000	36600883460	36600127760	
16600400920	2500	36600883470	36600127770	
16600400930	2700	36600883480	36600127780	
16600400900	3000	36600883490	36600127790	标准
16600400940	3300	36600883500	36600127800	
16600400950	3500	36600883510	36600127810	
16600400960	3700	36600883520	36600127820	
16600400970	4000	36600883530	36600127830	
16600400980	4250	36600883540	36600127840	
16600400990	4500	36600883550	36600127850	
16600956010	4750	36600883560	36600127860	
16600956020	5000	36600883570	36600127870	
16600956030	5500	36600883580	36600127880	
16600956040	6000	36600883590	36600127890	

图35/FIG.35

起升油缸(基本型)/ Lift cylinder (normal)

C CPYD30XH06
D CPYD35XH06
G CPCD30XX33
H CPCD35XX33

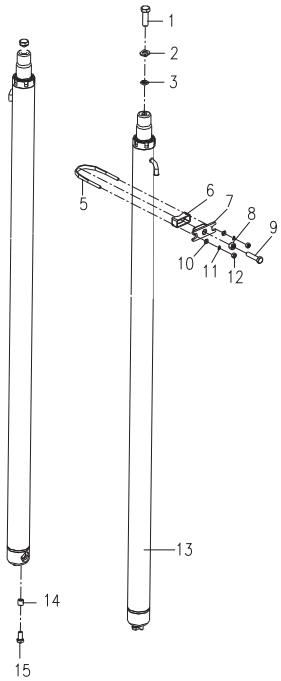

序号 Item No	编码 Code	图号 Part No	零部件名称 Description		数量 Q'ty	备注 Remark
1	51204133714	GB/T5783	螺栓M16×40	Bolt M16×40	2	A
	51204151714	GB/T5783	螺栓M20×55	Bolt M20×55	2	BC
2	30082154801	LG0030D.10-010	调整垫	Adjustment gasket	2	A/0.5mm
	30082154807	LG0030D.10-010	调整垫	Adjustment gasket	2	A/1mm
	30082154808	LG0030D.10-010	调整垫	Adjustment gasket	2	A/2mm
	30082154804	LG0035D.10-001	调整垫	Adjustment gasket	2	BC/0.5mm
	30082154804	LG0035D.10-001	调整垫	Adjustment gasket	2	BC/1mm
	30082154804	LG0035D.10-001	调整垫	Adjustment gasket	2	BC/2mm
3	51401130107	GB/T93	垫圈16	Washer 16	2	A
	51401150107	GB/T93	垫圈20	Washer 20	2	BC
4	56171000101	JB/T8870	喉箍d16(10~16)	Hoop	5	
5	60700009108	LG0030D5.10-004	卡箍	Clamp	2	
6	30082113900	LG0030D.10-013	橡胶垫	Rubber gasket	2	
7	30082185000	LG0030D.10-012	箍座	Clamp seat	2	
8	51309000519	GB/T6171	螺母M12×1.25	Nut M12×1.25	2	
9	51207115614	GB/T5786	螺栓M12×1.25×50	Bolt M12×1.25×50	2	

图35/FIG.35

起升油缸(基本型)/ Lift cylinder (normal mast)

C CPYD30XH06
D CPYD35XH06
G CPCD30XX33
H CPCD35XX33

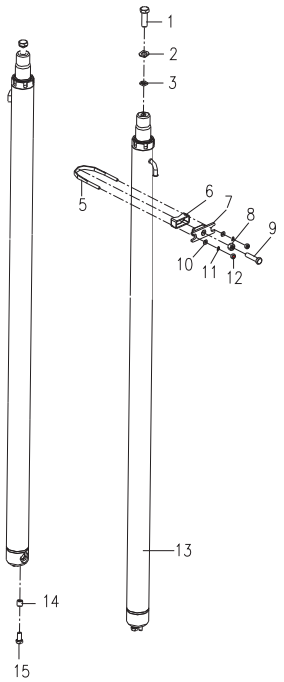

序号 Item No	编码 Code	图号 Part No	零部件名称 Description		数量 Q'ty	备注 Remark
10	51421090115	GB/T97.1	垫圈8	Washer 8	4	
11	51401090107	GB/T93	垫圈8	Washer 8	4	
12	51307000919	GB/T6170	螺母M8	Nut M8	4	
13	16600401100	LG0030D.10.11	油缸Φ56/Φ45	Lift cylinder	2	A
	16600022910	LG0035D.10.08	油缸Φ63/Φ50	Lift cylinder	2	BC
14	30082135101	LG0030D.10-009	轴套	Shaft sleeve	1	
15	51207115114	GB/T5786	螺栓M12×1.25×25	Bolt M12×1.25×25	1	

起升油缸参数/Lift cylinder parameter

起升高度 Lifting height	3t油缸编码 Cylinder code	3t油缸代号 Cylinder No.	3.5t油缸编码 Cylinder code	3.5t油缸代号 Cylinder No.	活塞杆 Rod,piston	备　注 Remark
2000	16600401040	LGG030SP200H	16600079020	LGG035SP200B-LH	-	
2500	16600401060	LGG030SP250H	16600079030	LGG035SP250B-LH	-	
2700	16600401080	LGG030SP270H	16600079040	LGG035SP270B-LH	-	
3000	16600401100	LGG030SP300H	16600022910	LGG035SP300B-LH	-	标准
3300	16600401120	LGG030SP330H	16600079050	LGG035SP330B-LH	-	
3500	16600401140	LGG030SP350H	16600022930	LGG035SP350B-LH	-	
3700	16600401160	LGG030SP370H	16600079060	LGG035SP370B-LH	-	
4000	16600401200	LGG030SP400H	16600022950	LGG035SP400B-LH	-	
4250	16600401220	LGG030SP425H	16600079070	LGG035SP425B-LH	-	
4500	16600015860	LGG030SP450H	16600022970	LGG035SP450B-LH	-	
4750	16600015880	LGG030SP475H	16600079080	LGG035SP475B-LH	-	
5000	16600015900	LGG030SP500H	16600079010	LGG035SP500B-LH	-	
5500	16600015920	LGG030SP550H	16600079090	LGG035SP550B-LH	-	
6000	16600015940	LGG030SP600H	16600079100	LGG035SP600B-LH	-	

图36/FIG.36 倾斜油缸/Tilt cylinder

A	CPYD20XH06
B	CPYD25XH06
C	CPYD30XH06
D	CPYD35XH06
E	CPCD20XX33
F	CPCD25XX33
G	CPCD30XX33
H	CPCD35XX33

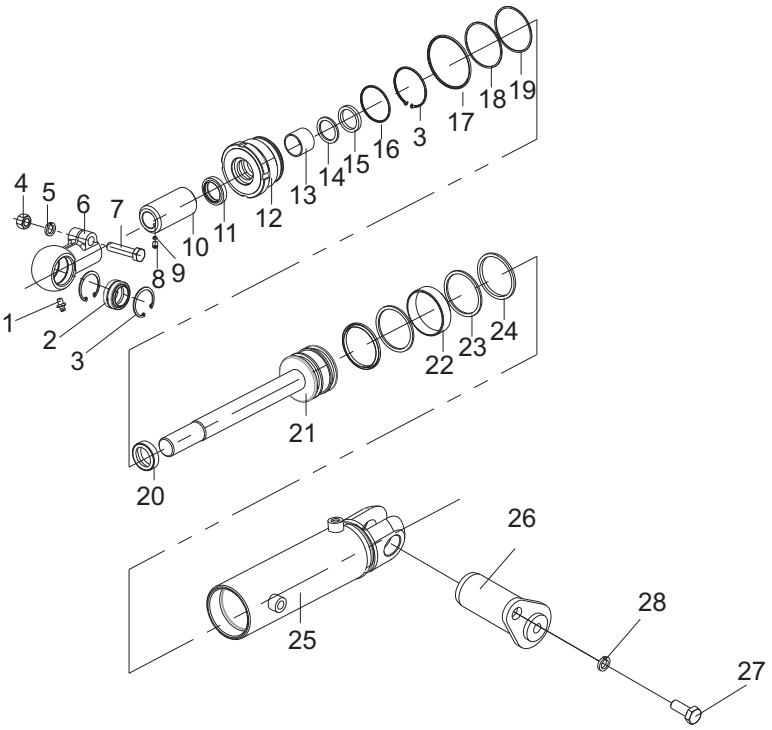

左缸编码 Left cylinder	右缸编码 Right cylinder	前/后倾角 Tilt angle	限位套 Spacer	限位套 Spacer	限位套 Spacer	备　注 Remark
16600149530	16600149540	6°-12°	–	–	–	
16600149550	16600149560	6°-6°	36600071760	36600071760	–	
16600149570	16600149580	3°-6°	36600071760	36600718010	36600071770	
16600149590	16600149600	3°-3°	36600718010	36600718010	36600071770	
16600149610	16600149620	6°-10°	36600071800	36600071800	–	

图36/FIG.36 倾斜油缸/Tilt cylinder

A	CPYD20XH06
B	CPYD25XH06
C	CPYD30XH06
D	CPYD35XH06
E	CPCD20XX33
F	CPCD25XX33
G	CPCD30XX33
H	CPCD35XX33

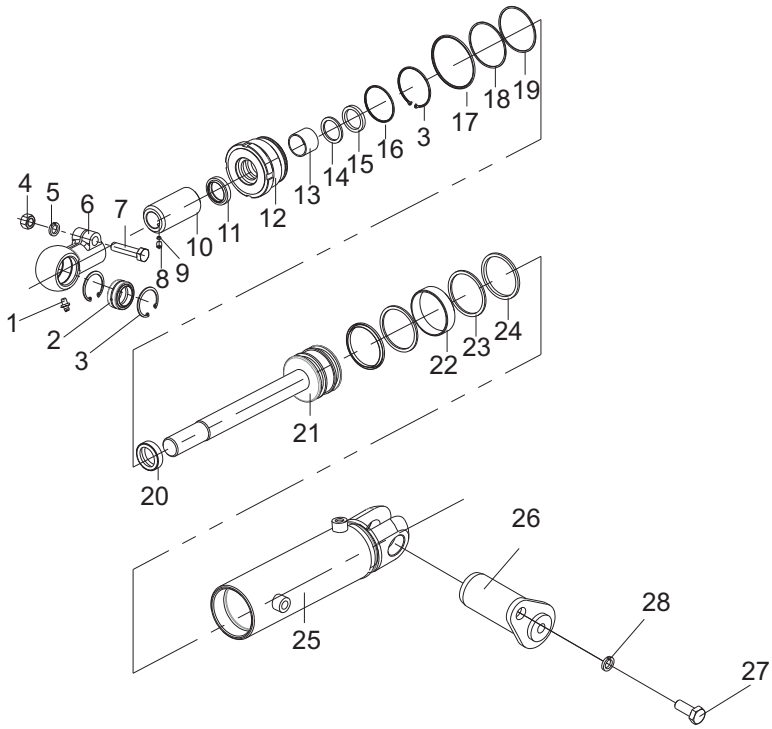

序号 Item No	编码 Code	图号 Part No	零部件名称 Description		数量 Q'ty	备注 Remark
A	16600149540	LGG035X6/12RH-N	3.5T右倾斜油缸	Tilt cylinder right	1	根据参数表选用
B	16600149530	LGG035X6/12LH-N	3.5T左倾斜油缸	Tilt cylinder left	1	根据参数表选用
1	56201000501	JB/T7940.1	油杯PT1/8	Fitting grease	2	
2	52555000901	JB/T8879	关节轴承GE30ES	Joint bearing	2	
3	51451380107	GB/T893.1	挡圈47	Snap ring	4	
4	51309000619	GB/T6171	螺母M14×1.5	Nut	2	
5	51401120107	GB/T93	垫圈14	Washer 14	2	
6	36600240650	LGG035X6/12RH-N-01	杆头	Ear ring	2	
7	51210120314	GB/T5785	螺栓M14×1.5×55	Bolt	2	
8	51106221707	GB/T77	螺钉M10×12	Screw	2	
9	36600321020	LGG030X6/12H-02	锁紧垫φ8×3	Lock gasket	2	
10	36600071760	LGG035X6/6RH-N-02	限位套	Limit position sheath	2	
11	56003101613	Q/LG08002	防尘圈35×47×7	Dustproof ring	2	根据参数表选用
12	36600031170	LGG035X6/12RH-N-03	导向套	Guide sleeve	2	

图36/FIG.36 倾斜油缸/Tilt cylinder

A	CPYD20XH06
B	CPYD25XH06
C	CPYD30XH06
D	CPYD35XH06
E	CPCD20XX33
F	CPCD25XX33
G	CPCD30XX33
H	CPCD35XX33

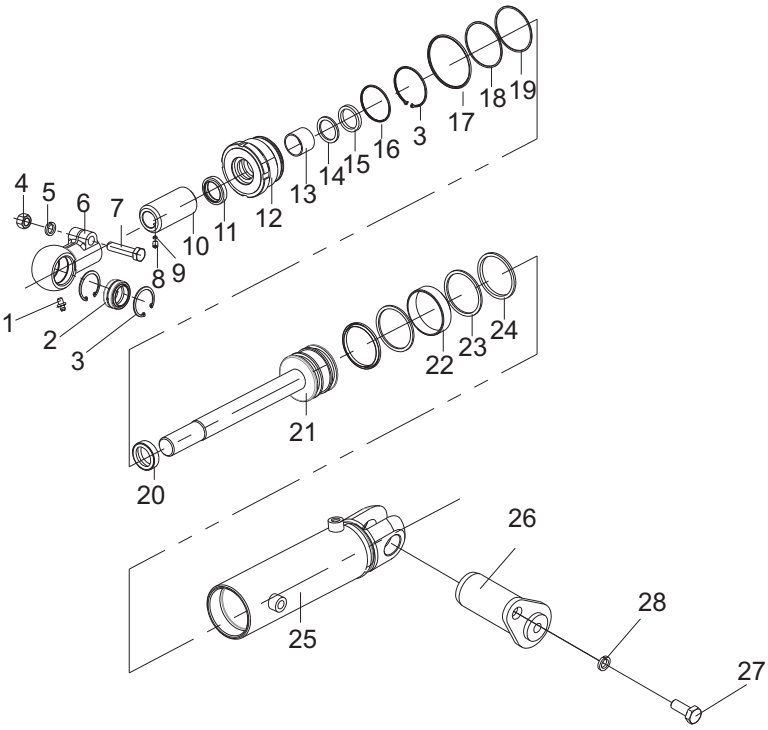

序号 Item No	编码 Code	图号 Part No	零部件名称 Description		数量 Q'ty	备注 Remark
13	52500004401		钢背轴承35×39×30	Steel backed bearing	2	
14	56192069201		挡圈35×45×3	Snap ring	2	
15	56187019901		轴用密封圈35×45×9	Seal ring	2	
16	36600280390	LGG035X6/12RH-N-04	挡板47x40x2. 5	Baffle	2	
17	56900020003	AS568	0形圈75. 87×2. 62	O-ring	2	
18	56192009101		挡圈75. 2×80×1. 25	Snap ring	2	
19	56908001204	JISB2401	0形圈74. 4×3. 1	O-ring	2	
20	36600071770	LGG035X6/12RH-N-05	间隔套	Spacer	2	根据参数表选用
21	36600882820	LGG035X6/12RH-N.20	活塞杆组件	Piston rod element	2	
22	56199021001		支承环75×80×20	Pivot ring	2	
23	56191001501		活塞密封圈80×70×7	Piston rod	4	
24	56192047701		挡圈80×70×3	Snap ring	4	
25A	36600463930	LGG035X6/12RH-N.10	缸体	Tube cylinder R.H	2	
25B	36600463960	LGG035X6/12LH-N.10	缸体	Tube cylinder L.H	2	

图36/FIG.36 倾斜油缸/Tilt cylinder

A	CPYD20XH06
B	CPYD25XH06
C	CPYD30XH06
D	CPYD35XH06
E	CPCD20XX33
F	CPCD25XX33
G	CPCD30XX33
H	CPCD35XX33

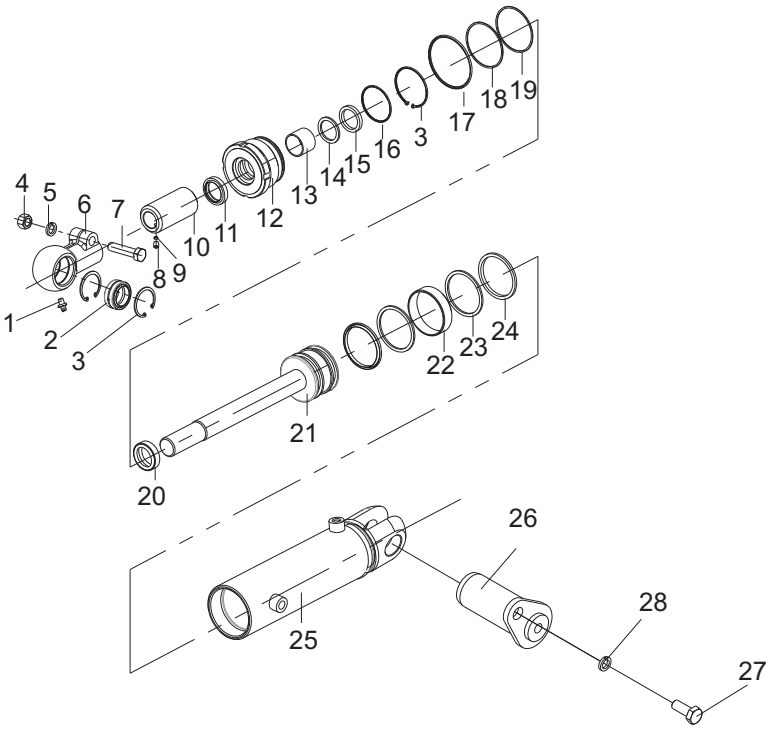

序号 Item No	编码 Code	图号 Part No	零部件名称 Description		数量 Q'ty	备注 Remark
26	60700002236	LG0035DTN.10.07	销轴焊合	Pin shaft weldment	2	
27	51207105014	GB/T5786	螺栓M10×1.25×20	Bolt M10×1.25×20	2	
28	51401100107	GB/T93	垫圈10	Washer 10	2	

图37/FIG.37

侧移管路(基本型)/ Side shifting pipeline（Normal mast）

A CPYD20XH06
B CPYD25XH06
E CPCD20XX33
F CPCD25XX33

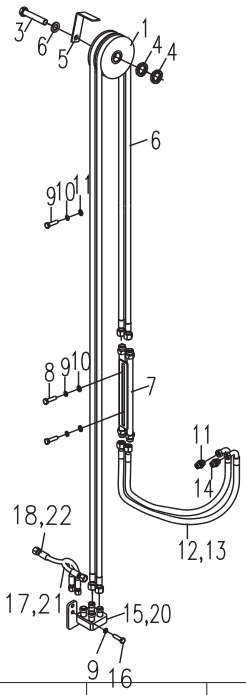

高度 Lifting height	2000	2500	2700	3000	3300	3500	3700	4000
序号6胶管 Hose,NO.6	/	17272009215	17272006925	17272009216	17272006928	17272006930	17272008727	17272008558
高度 Lifting height	4250	4500	4750	5000	5500	6000		
序号6胶管 Hose,NO.6	17272009272	17272009234	/	/	/	/		

序号 Item No	编码 Code	图号 Part No	零部件名称 Description		数量 Q'ty	备注 Remark
1	60700000379	LG0030D.10.13-005	滑轮总成	Pulley assy.	1	四联2个
2	30082123004	LG0030D.10.13-006	挡板	Baffle	1	四联2个
3	51210132414	GB/T5785	螺栓M16×1. 5×90	Bolt M16×1. 5×90	1	四联2个
4	51421130115	GB/T97.1	垫圈16	Washer 16	2	四联4个
5	51401130107	GB/T93	垫圈16	Washer 16	1	四联2个
6	17272009234	20411-16T*1K05*2730	胶管总成	Hose assy.	2	四联4根
7	30082013340	LG0030DIII.10.10.03	钢管总成	Steel tube assy.	1	四联2个
8	51204091414	GB/T5783	螺栓M8×40	Bolt M8×40	2	四联4个
9	51401090107	GB/T93	垫圈8	Washer 8	4	四联8个
10	51421090115	GB/T97.1	垫圈8	Washer 8	2	四联4个
11	60700002675	LG0025BVI.12.06	过渡接头	Transition connector	1	四联2个
12	17272008620	20411-16T*1K05*1090	胶管总成	Hose assy.	2	
13	17272007882	20411-16T*1T05*1240	胶管总成	Hose assy.	2	四联用
14	60700002676	LG0025BVI.12.07	过渡接头	Transition connector	1	四联2个

图37/FIG.37

侧移管路(基本型)/ Side shifting pipeline（Normal mast）

A CPYD20XH06
B CPYD25XH06
E CPCD20XX33
F CPCD25XX33

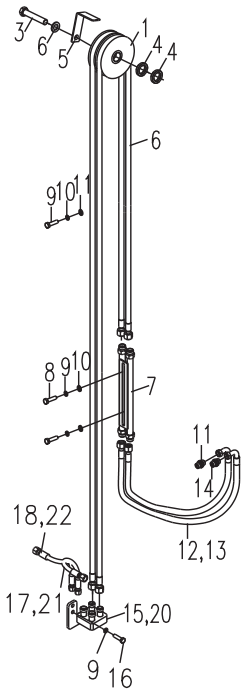

序号 Item No	编码 Code	图号 Part No	零部件名称 Description	数量 Q'ty	备注 Remark
15	60700009085	LG0030D5.10.09.01	接头焊合 Connector weldment	1	
16	51204091014	GB/T5783	螺栓M8×20 Bolt M8×20	2	四联4个
17	17272005350	LG0025D.10.08.03	胶管总成 Hose assy.	1	
18	17272008103	LG0025D.10.08.12	胶管总成 Hose assy.	1	
19	56145077501	GB/T3452.1	O形圈8×2. 65 O-ring 8×2. 65	2	四联4个
20	60700009088	LG0030D5.10.09.02	接头焊合 Connector weldment	1	四联用
21	17272005520	LG0025D.10.08.10	胶管总成 Hose assy.	1	四联用
22	17272005521	LG0025D.10.08.11	胶管总成 Hose assy.	1	四联用

图38/FIG.38

侧移管路(基本型)/ Side shifting pipeline (Normal mast)

C CPYD30XH06
D CPYD35XH06
G CPCD30XX33
H CPCD35XX33

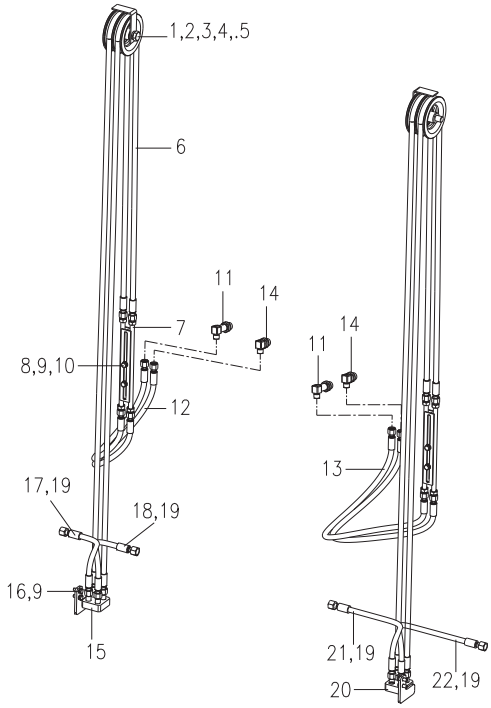

高度 Lifting height	2000	2500	2700	3000	3300	3500	3700	4000
序号6胶管(3t) Hose,NO.6	17272006918	17272008724	17272006932	17272002561	17272008731	17272009274	17272006940	17272009634
高度 Lifting height	4250	4500	4750	5000	5500	6000		
序号6胶管(3t) Hose,NO.6	17272007645	17272007646	17272007647	17272008580	17272008582	17272007877		
高度 Lifting height	2000	2500	2700	3000	3300	3500	3700	4000
序号6胶管(3.5t) Hose,NO.6	17272006925	17272008727	17272008559	17272009234	17272009274	17272008572	17272008573	17201000012
高度 Lifting height	4250	4500	4750	5000	5500	6000		
序号6胶管(3.5t) Hose,NO.6	17272008578	17272009235	17272015978	17272009609	17272007649	17272009613		

序号 Item No	编码 Code	图号 Part No	零部件名称 Description		数量 Q'ty	备注 Remark
1	60700000379	LG0030D.10.13-005	滑轮总成	Pulley	1	四联2个
2	30082123004	LG0030D.10.13-006	挡板	Baffle	1	四联2个
3	51210132414	GB/T5785	螺栓M16×1.5×90	Bolt M16×1.5×90	1	四联2个
4	51421130115	GB/T97.1	垫圈16	Washer 16	2	四联3个
5	51401130107	GB/T93	垫圈16	Washer 16	1	四联2个
6	17272008561	20411-16T*1K05*2540	胶管总成	Hose assy.	2	A-F/四联4根
	17272009234	20411-16T*1K05*2730	胶管总成	Hose assy.	2	GHIJ/四联4根
7	30082013340	LG0030DIII.10.10.03	钢管总成	Steel tube assy.	1	四联2个
8	51204091414	GB/T5783	螺栓M8×40	Bolt M8×40	2	四联4个
9	51401090107	GB/T93	垫圈8	Washer 8	4	四联8个

图38/FIG.38 侧移管路(基本型)/ Side shifting pipeline（Normal mast）

C CPYD30XH06
D CPYD35XH06
G CPCD30XX33
H CPCD35XX33

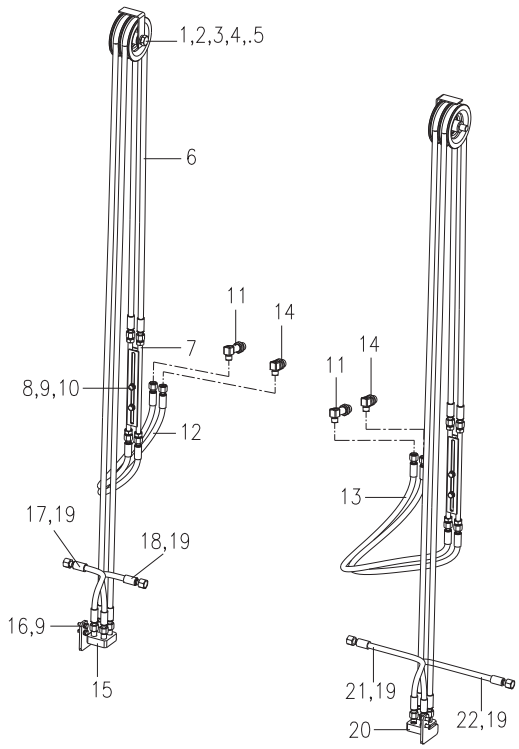

序号 Item No	编码 Code	图号 Part No	零部件名称 Description	数量 Q'ty	备注 Remark
10	51421090115	GB/T97.1	垫圈8 Washer 8	2	四联4个
11	17272017099	20411-16T*1K05*700+RC	胶管总成 Transition connector	2	
12	17272017100	20411-16T*1K05*900+RC	胶管总成 Hose assy.	2	四联用
13	60700002675	LG0025BⅥ.12.06	过渡接头 Hose assy.	1	四联2个
14	60700002676	LG0025BⅥ.12.07	过渡接头 Transition connector	1	四联2个
15	60700009085	LG0030D5.10.09.01	接头焊合 Connector weldment	1	
16	51204091014	GB/T5783	螺栓M8×20 Bolt M8×20	2	四联4个
17	17272005350	LG0025D.10.08.03	胶管总成 Hose assy.	1	
18	17272008103	LG0025D.10.08.12	胶管总成 Hose assy.	1	
19	56145077501	GB/T3452.1	O形圈8×2.65 O-ring 8×2.65	2	四联4个
20	60700009088	LG0030D5.10.09.02	接头焊合 Connector weldment	1	四联用
21	17272005520	LG0025D.10.08.10	胶管总成 Hose assy.	1	四联用
22	17272005521	LG0025D.10.08.11	胶管总成 Hose assy.	1	四联用

图39/FIG.39

起升管路(基本型)/ Lift pipeline (normal mast)

A CPYD20XH06
B CPYD25XH06
E CPCD20XX33
F CPCD25XX33

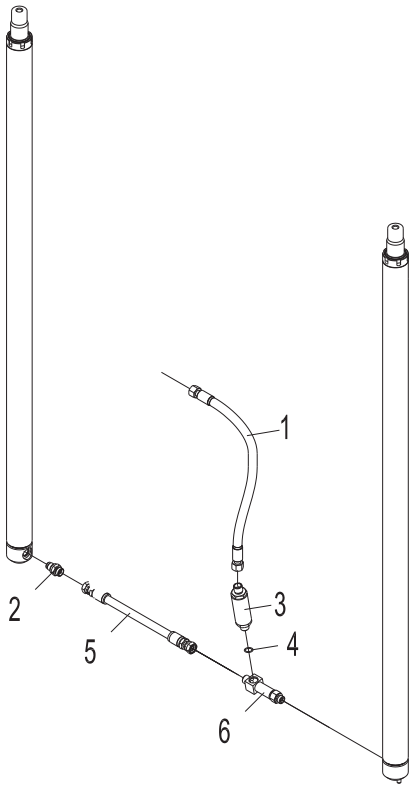

序号 Item No	编码 Code	图号 Part No	零部件名称 Description		数量 Q'ty	备注 Remark
1	17272002279	30D-1200014	胶管总成	Hose assy.	1	
2	60911010771	30D-1200013	三通接头总成	T-connector assy.	1	
3	60304000243	20B-1201000	限速阀	Speed limited valve	1	
4	56145005401	GB/T3452.1	0形圈19×2. 65	O-ring	1	
5	17272017848	20411-22T*2T08*330+RS	胶管总成	Hose assy.	1	
6	60304000633	30D-1226000	切断阀总成	Cutoff valve assy.	1	

图40/FIG.40

起升管路(基本型)/ Lift pipeline (normal mast)

C	CPYD30XH06
D	CPYD35XH06
G	CPCD30XX33
H	CPCD35XX33

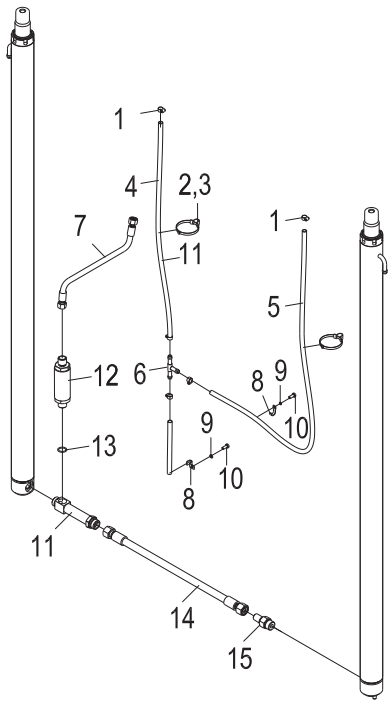

序号 Item No	编码 Code	图号 Part No	零部件名称 Description		数量 Q'ty	备注 Remark
1	56171000101	JB/T8870	喉箍d16(10~16)	Hoop	5	
2	68080000004	20B-1202016	扎带5×350	Binding tape	2	
3	60911010924	LG0030D.12-020	回油管布夹	Oil return pipe cloth clip	2	
4	30012187929	LG0016B.12.01-005	塑料管Φ12×1.5-L=900	Plastic tube	1	CG
	32012109223	LG0012ED.12-009	塑料管Φ12×1.5-L=1040	Plastic tube	1	DH
5	30012112201	LG0030D.12-002	塑料管Φ12×1.5-L=1360	Plastic tube	1	CG
	32012109227	LG0012ED.12-009	塑料管Φ12×1.5-L=1440	Plastic tube	1	DH
6	30012112002	30D-1200011	三通接头	T-connector	1	
7	17272002279	30D-1200014	胶管总成	Hose assy.	1	
8	60700002648	LG0035DTN.10.11-003	管夹	Hose assy.	3	
9	51401080107	GB/T93	垫圈6	Pipe clip	3	
10	51204080914	GB/T5783	螺栓M6×16	Washer 6	3	
11	60911010771	30D-1200013	三通接头总成	Bolt M6×16	1	
12	60304100021	LG0030D.12.01	限速阀	T-connector assy.	1	
13	56145005401	GB/T3452.1	O形圈19×2.65	Speed limited valve	1	
14	17272017848	20411-22T*2T08*330+RS	胶管总成	Hose assy.	1	CG

图40/FIG.40

起升管路(基本型)/
Lift pipeline (normal mast)

C CPYD30XH06
D CPYD35XH06
G CPCD30XX33
H CPCD35XX33

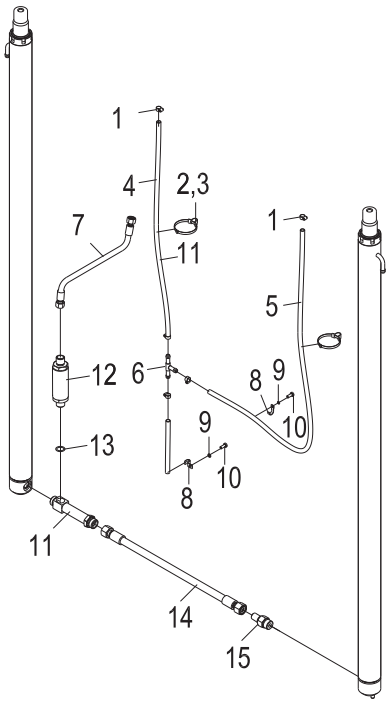

序号 Item No	编码 Code	图号 Part No	零部件名称 Description	数量 Q'ty	备注 Remark
	17272017847	20411-22T*2T08*310+RS	胶管总成 Hose assy.	1	DH
15	60304000633	30D-1226000	切断阀总成 Cutoff valve assy.	1	

图41/FIG.41

多路阀操纵(五联)/ Multi-way valve control (Quintuplex)

A	CPYD20XH06
B	CPYD25XH06
C	CPYD30XH06
D	CPYD35XH06
E	CPCD20XX33
F	CPCD25XX33
G	CPCD30XX33
H	CPCD35XX33

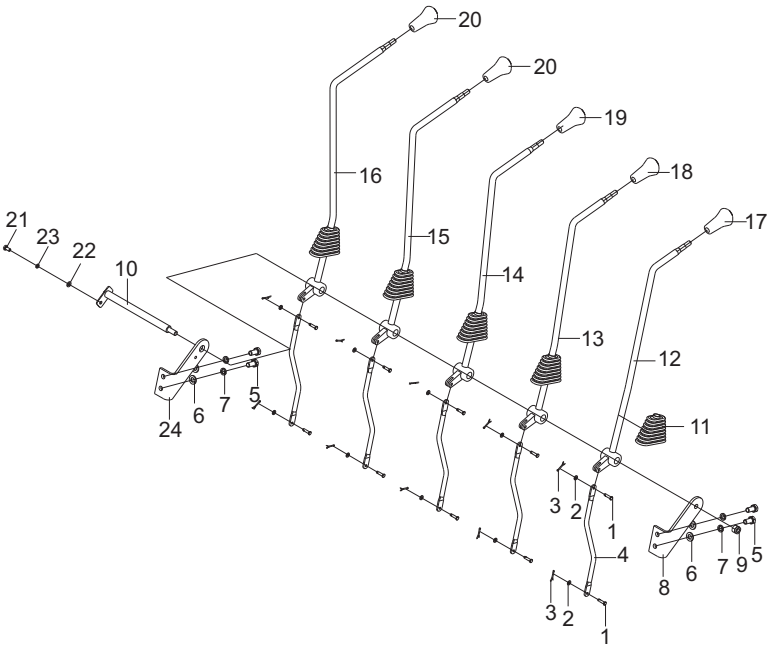

序号 Item No	编码 Code	图号 Part No	零部件名称 Description		数量 Q'ty	备注 Remark
1	60905000023	30D-1100004	销轴	Pin shaft	4	三联6件/四联8件/五联10件
2	51421070115	GB/T97.1	垫圈5	Washer 5	4	三联6件/四联8件/五联10件
3	51512061001	GB/T91	销2×20	Pin 2×20	4	三联6件/四联8件/五联10件
4	60700002343	LG0035DTN.11-001	连接杆	Connecting rod	2	三联3件/四联4件/五联5件
5	51204101014	GB/T5783	螺栓M10×20	Bolt M10×20	4	
6	51421100115	GB/T97.1	垫圈10	Washer 10	4	
7	51401100107	GB/T93	垫圈10	Washer10	4	
8	30011115014	LG0035DTN.11-002	支架	Bracket	1	
9	51341000619	GB/T889.1	螺母M10	Nut M10	1	两联用
10	60700002347	LG0035DTN.11.01	销轴焊合	Pin shaft weldment	1	三联用
	60700002348	LG0035DTN.11.02	销轴焊合	Pin shaft weldment	1	四联用
	60700002349	LG0035DTN.11.03	销轴焊合	Pin shaft weldment	1	五联用
	60700002350	LG0035DTN.11.04	销轴焊合	Pin shaft weldment	1	
11	60700001645	LG0035DTN.11-004	防尘套	Dust proof sheath	2	三联3件/四联4件/五联5件
12	60300003082	LG0035DTN.11.05	操纵杆焊合	Control rod weldment	1	
13	60300003083	LG0035DTN.11.06	操纵杆焊合	Control rod weldment	1	

图41/FIG.41

多路阀操纵(五联)/ Multi-way valve control(Quintuplex)

A CPYD20XH06
B CPYD25XH06
C CPYD30XH06
D CPYD35XH06
E CPCD20XX33
F CPCD25XX33
G CPCD30XX33
H CPCD35XX33

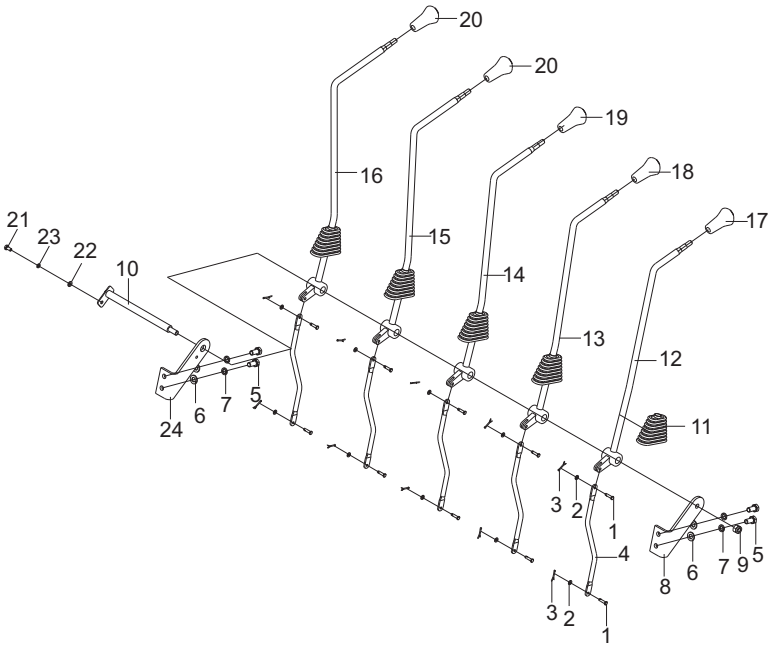

序号 Item No	编码 Code	图号 Part No	零部件名称 Description		数量 Q'ty	备注 Remark
14	60300003084	LG0035DTN.11.07	操纵杆焊合	Control rod weldment	1	三联用
15	60300003085	LG0035DTN.11.08	操纵杆焊合	Control rod weldment	1	四联用
16	60300003086	LG0035DTN.11.09	操纵杆焊合	Control rod weldment	1	五联用
17	60207010080	30D-1100001	手柄总成	Handle assy.	1	
18	60207010081	30D-1100002	手柄总成	Handle assy.	1	
19	60207010082	LG0030D.11-003	手柄总成	Handle assy.	1	三联3件/四联4件/五联5件
20	60207010083	LG0030D.11-004	手柄总成	Handle assy.	1	四联1件/五联2件
21	51204080814	GB/T5783	螺栓M6×12	Bolt M6×12	1	
22	51421080115	GB/T97.1	垫圈6	Washer 6	1	
23	51401080107	GB/T93	垫圈6	Washer 6	1	
24	30011115015	LG0035DTN.11-003	支架	Bracket	1	

图42/FIG.42 液压系统/Hydraulic system

A CPYD20XH06
B CPYD25XH06
C CPYD30XH06
D CPYD35XH06

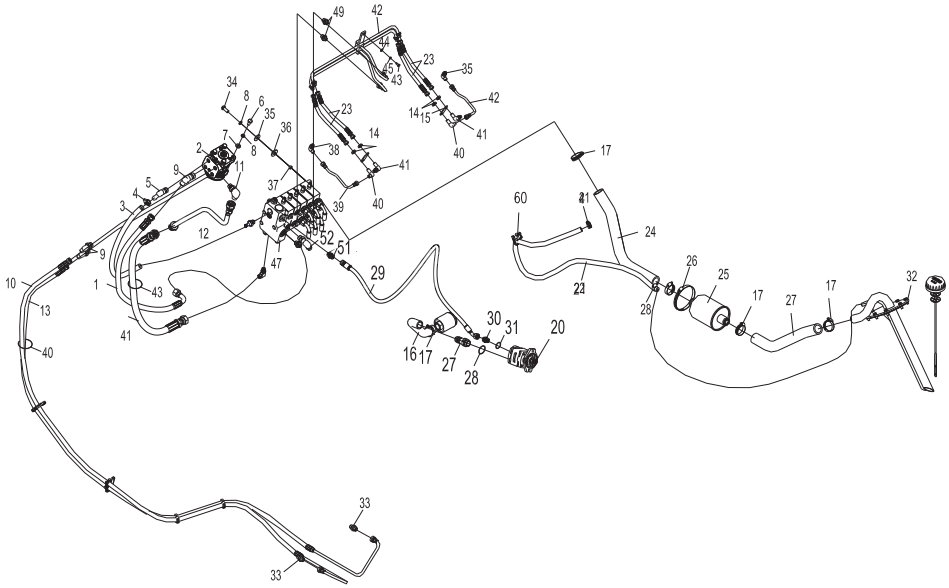

序号 Item No	编码 Code	图号 Part No	零部件名称 Description		数量 Q'ty	备注 Remark
1	17272015454	20411-16T/20691-16T*2T05*800	胶管总成	Hose assembly	1	
2	60300003095	LG0035DTN.12.01	转向器	Steering gear	1	
3	60700012170	CPCD35NX20Y4.12-004	胶管Φ10×3. 5-L=670	Hose Φ13×4-L=2300	1	
4	56171002301	JB/T8870	喉箍d25（16~25）	Hoop d25(16-25)	4	
5	60700002329	LG0035DTN.12.02	过渡接头	Transition adapter	1	
6	51204101014	GB/T5783	螺栓M10×20	Bolt M10×20	4	
7	51421100115	GB/T97.1	垫圈10	Washer 10	4	
8	51401100107	GB/T93	垫圈10	Washer 10	4	
9	60700002331	LG0035DTN.12.03	过渡接头	Transition adapter	3	
10	17272009873	20411-16T*1K05*2600	胶管总成	Hose assembly	1	AB
	17272008563	20411-16T*1K05*2680	胶管总成	Transition adapter	1	CD
11	17601000019	L1CH9-14-12OG	过渡接头	Steel tube assembly	3	
12	60700002324	LG0035DTN.12.05	钢管焊合	Nut M14×1.5	1	
13	17272008561	20411-16T*1K05*2540	胶管总成	Hose assembly	1	AB
	17272009873	20411-16T*1K05*2600	胶管总成	Plate	1	CD
14	51312000619	GB/T6173	螺母M14×1. 5	Oil suction pipe	4	

图42/FIG.42 液压系统/Hydraulic system

A LG30DTN
B LG30DTDN
C LG35DTN
D LG35DTDN

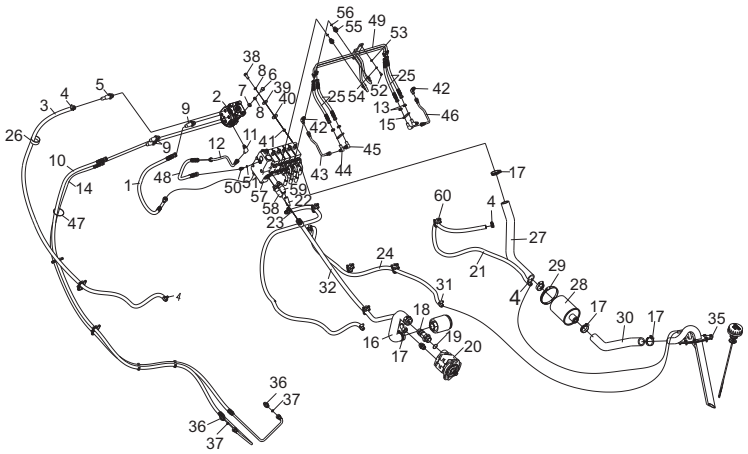

序号 Item No	编码 Code	图号 Part No	零部件名称 Description	数量 Q'ty	备注 Remark
15	30012117710	LG0035DTN.12-001	板 Plate	2	
16	60700012845	CPYD30XH06.12-001	吸油管 Oil suction pipe	1	
17	56171000601	JB/T8870	喉箍d50(32~50) Hoop d50(32-50)	6	
18	17601000554	30D-1200023	过渡接头 Transition connector	1	
19	56145008301	GB/T3452.1	O形圈30×3.55 O ring 30×3.55	1	
20	60301000209	LG0030GLT.12.01	齿轮泵 Gear pump	1	
21	60700002645	LG0035DTN.10.11-001	钢带型弹性环箍Φ14 Spring clamp	1	
22	30012187925	20B-1202002	塑料管Φ12×1.5-L=1250 Plastic tube Φ12×1.5-L=1250	1	
23	17272015455	20411D-14*1K04*320	胶管总成 Hose assembly	4	
24	60700002311	LG0035DTN.12-004	成型管 Molding pipe	1	
25	60300003093	LG0035DTN.12.07	滤清器总成 Air filter	1	
26	56171001401	JB/T8870	喉箍d110(90~110) Hoop d110(90-110)	1	
27	60700002806	LG0035DTN.12-009	成型管 Molding pipe	1	
28	56171000101	JB/T8870	喉箍d16(10~16) Hoop d16(10-16)	1	
29	17272010113	20411-22T/20441-22T*2T08*1300	胶管总成 Hose assembly	1	
30	17601000141	30D-1200024	过渡接头 Transitiom connector	1	

图42/FIG.42 液压系统/Hydraulic system

A LG30DTN
B LG30DTDN
C LG35DTN
D LG35DTDN

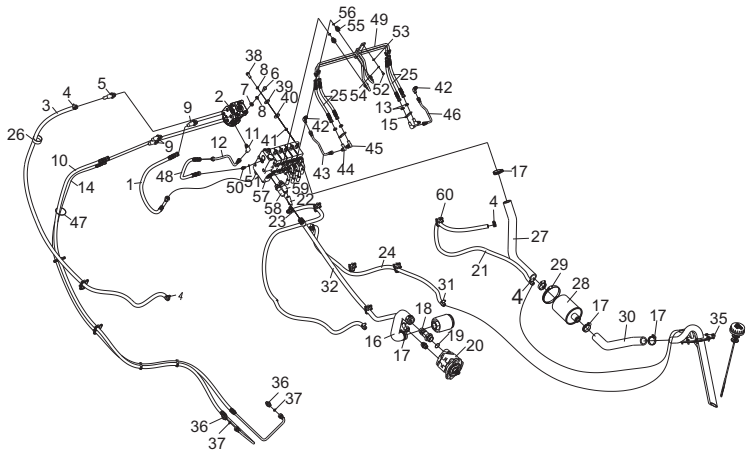

序号 Item No	编码 Code	图号 Part No	零部件名称 Description		数量 Q'ty	备注 Remark
31	56145005101	GB/T3452.1	O形圈18×2.65	O ring 18×2.65	1	
32	30012073051	CPYD30XH06.12.01	液压油箱盖板总成	Cover plate assembly	1	
33	17601000007	30D-1200027	过渡接头	Transitiom connector	2	
34	51207105114	GB/T5786	螺栓M10×1.25×25	Bolt M10×1.25×25	4	
35	51420100121	GB/T96.1	垫圈10	Washer 10	4	
36	60700002346	LG0035DTN.12-006	橡胶垫	Rubber gasket	4	
37	60700002344	LG0035DTN.12-007	套管	Thimble	4	
38	17601000183	30D-1206000	过渡接头	Transitiom connector	2	
39	60700002325	LG0035DTN.12.09	钢管焊合	Steel tube weldment	1	
40	60700002337	LG0035DTN.12-008	过渡接头	Transitiom connector	2	
41	60700002333	LG0035DTN.12.10	过渡接头	Transitiom connector	2	
42	60700002326	LG0035DTN.12.11	钢管焊合	Steel tube weldment	1	
43	68080000005	LG0100DT.12-020	扎带8×350	Binding tape	5	
44	17272009898	20411D-14*1K04*550	胶管总成	Hose assembly	1	
45	60700012848	CPYD30XH06.12.02	钢管焊合	Steel tube weldment	1	
46	51204080814	GB/T5783	螺栓M6×12	Bolt M6×12	1	

图42/FIG.42 液压系统/Hydraulic system

A LG30DTN
B LG30DTDN
C LG35DTN
D LG35DTDN

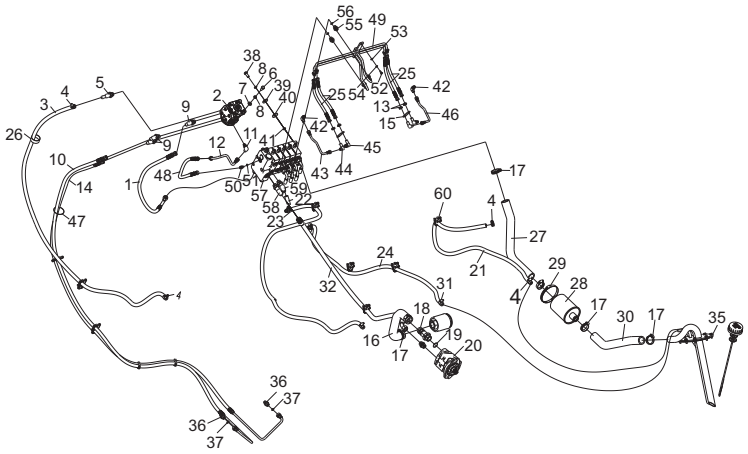

序号 Item No	编码 Code	图号 Part No	零部件名称 Description	数量 Q'ty	备注 Remark
47	51421080115	GB/T97.1	垫圈6 Washer 6	1	
48	51401080107	GB/T93	垫圈6 Washer 6	1	
49	17601000212	30D-1200001	过渡接头 Transitiom connector	2	
50	60300016304	LG0030DT5.12.02	多路阀总成 Multiway valve	1	
51	60700002335	LG0035DTN.12.14	过渡接头 Transitiom connector	1	
52	17601000297	L1CH9-22-20OG/L	过渡接头 Transitiom connector	1	

图43/FIG.43 液压系统/Hydraulic system

E CPCD20XX33
F CPCD25XX33
G CPCD30XX33
H CPCD35XX33

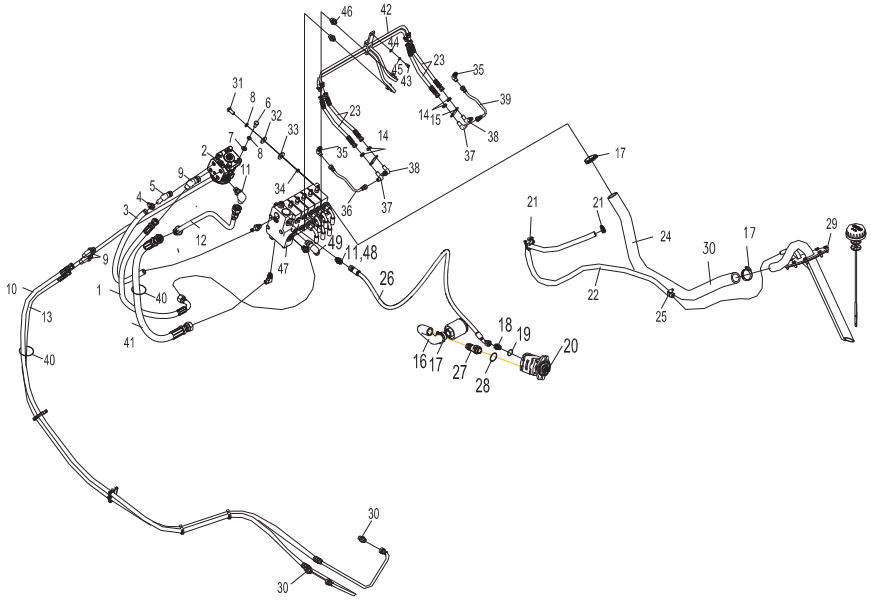

序号 Item No	编码 Code	图号 Part No	零部件名称 Description		数量 Q'ty	备注 Remark
1	17272015454	20411-16T/20691-16T*2T05*800	胶管总成	Hose assembly	1	
2	60300003095	LG0035DTN.12.01	转向器	Steering gear	1	
3	60700012170	CPCD35NX20Y4.12-004	胶管Φ10×3. 5-L=670	Hose Φ13×3.5-L=670	1	
4	56171002301	JB/T8870	喉箍d25（16~25）	Hoop d25(16-25)	4	
5	60700002329	LG0035DTN.12.02	过渡接头	Transition adapter	1	
6	51204101014	GB/T5783	螺栓M10×20	Bolt M10×20	4	
7	51421100115	GB/T97.1	垫圈10	Washer 10	4	
8	51401100107	GB/T93	垫圈10	Washer 10	4	
9	60700002331	LG0035DTN.12.03	过渡接头	Transition adapter	3	
10	17272008563	20411-16T*1K05*2680	胶管总成	Hose assembly	1	
11	17601000019	L1CH9-14-12OG	过渡接头	Transition adapter	3	
12	60700002324	LG0035DTN.12.05	钢管焊合	Steel tube assembly	1	
13	17272009873	20411-16T*1K05*2600	胶管总成	Nut M14×1.5	1	
14	51312000619	GB/T6173	螺母M14×1. 5	Hose assembly	4	
15	30012117710	LG0035DTN.12-001	板	Plate	2	
16	60800008842	CPCD30XX33.12-003	吸油管	Oil suction pipe	1	

图33/FIG.33 液压系统/Hydraulic system

E CPCD20XX33
F CPCD25XX33
G CPCD30XX33
H CPCD35XX33

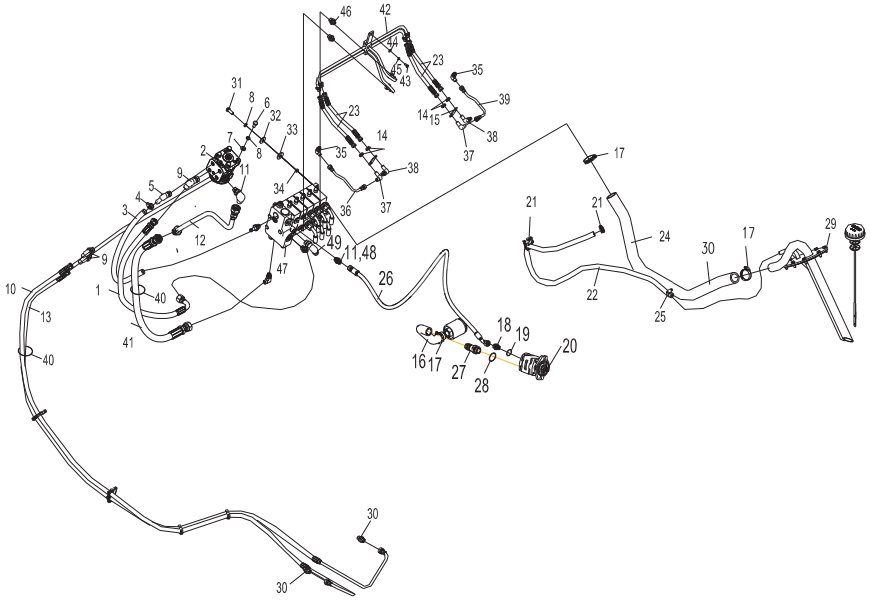

序号 Item No	编码 Code	图号 Part No	零部件名称 Description	数量 Q'ty	备注 Remark
17	56171000601	JB/T8870	喉箍d50（32~50） Hoop d50(32-50)	6	
18	17601000554	30D-1200023	过渡接头 Transitiom connector	1	
19	56145008301	GB/T3452.1	O形圈30×3. 55 O ring 30×3.55	1	
20	60301000209	LG0030GLT.12.01	齿轮泵 Gear pump	1	
21	60700002645	LG0035DTN.10.11-001	钢带型弹性环箍Φ14 Spring clamp	1	
22	30012187925	20B-1202002	塑料管Φ12×1. 5-L=1250 Plastic tube Φ12×1.5-L=1250	1	
23	17272015455	20411D-14*1K04*320	胶管总成 Hose assembly	4	
24	60800008671	CPCD30XX33.12-002	成型管 Molding pipe	1	
25	56171000101	JB/T8870	喉箍d16（10~16） Hoop d16(10-16)	1	
26	17272010113	20411-22T/20441-22T*2T08*1300	胶管总成 Hose assembly	1	
27	17601000141	30D-1200024	过渡接头 Transition connector	1	
28	56145005101	GB/T3452.1	O形圈18×2. 65 O ring 18×2.65	1	
29	30012073062	CPCD30XX33.12.01	液压油箱盖板总成 Cover plate assembly	1	
30	17601000007	30D-1200027	过渡接头 Transition connector	2	
31	51207105114	GB/T5786	螺栓M10×1. 25×25 Bolt M10×1.25×25	4	
32	51420100121	GB/T96.1	垫圈10 Washer 10	4	

图43/FIG.43 液压系统/Hydraulic system

E CPCD20XX33
F CPCD25XX33
G CPCD30XX33
H CPCD35XX33

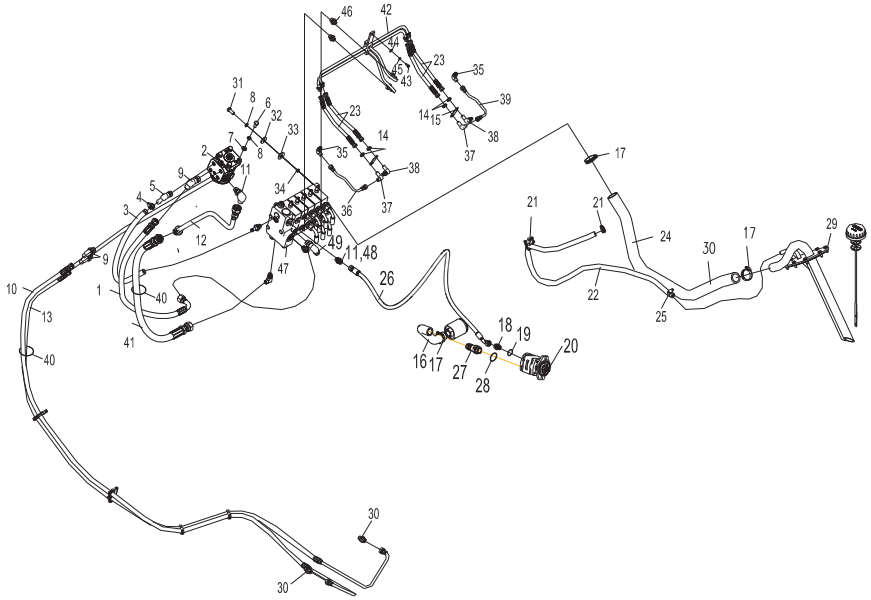

序号 Item No	编码 Code	图号 Part No	零部件名称 Description		数量 Q'ty	备注 Remark
33	60700002346	LG0035DTN.12-006	橡胶垫	Rubber gasket	4	
34	60700002344	LG0035DTN.12-007	套管	Thimble	4	
35	17601000183	30D-1206000	过渡接头	Transitiom connector	2	
36	60700002325	LG0035DTN.12.09	钢管焊合	Steel tube weldment	1	
37	60700002337	LG0035DTN.12-008	过渡接头	Transitiom connector	2	
38	60700002333	LG0035DTN.12.10	过渡接头	Transitiom connector	2	
39	60700002326	LG0035DTN.12.11	钢管焊合	Steel tube weldment	1	
40	68080000005	LG0100DT.12-020	扎带8×350	Binding tape	5	
41	17272009898	20411D-14*1K04*550	胶管总成	Hose assembly	1	
42	60700012848	CPYD30XH06.12.02	钢管焊合	Steel tube weldment	1	
43	51204080814	GB/T5783	螺栓M6×12	Bolt M6×12	1	
44	51421080115	GB/T97.1	垫圈6	Washer 6	1	
45	51401080107	GB/T93	垫圈6	Washer 6	1	
46	17601000212	30D-1200001	过渡接头	Transitiom connector	2	
47	60300016304	LG0030DT5.12.02	多路阀总成	Multiway valve	1	
48	60700002335	LG0035DTN.12.14	过渡接头	Transitiom connector	1	

图43/FIG.43 液压系统/Hydraulic system

E CPCD20XX33
F CPCD25XX33
G CPCD30XX33
H CPCD35XX33

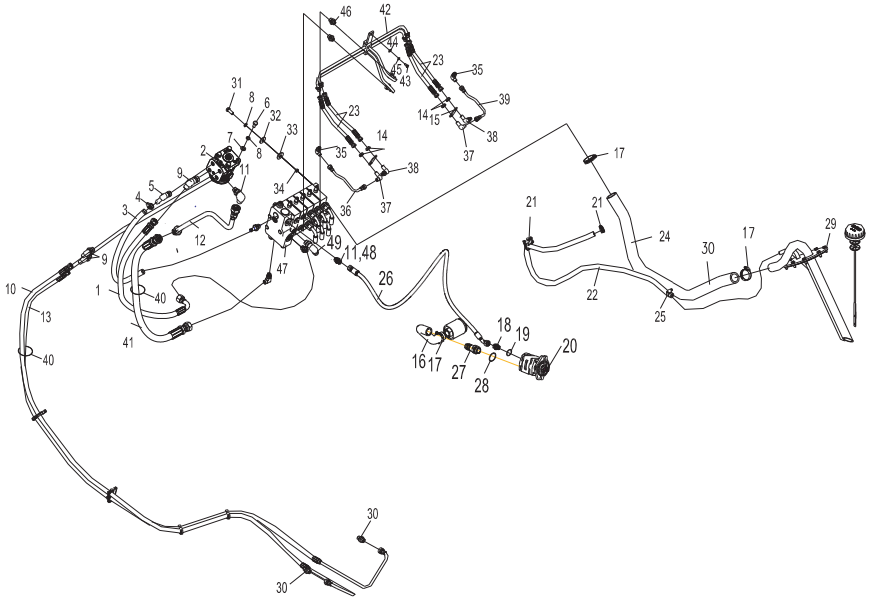

序号 Item No	编码 Code	图号 Part No	零部件名称 Description	数量 Q'ty	备注 Remark
49	17601000297	L1CH9-22-20OG/L	过渡接头 Transitiom connector	1	

图44/FIG.44 液压油箱/Hydraulic oil tank

A	CPYD20XH06
B	CPYD25XH06
C	CPYD30XH06
D	CPYD35XH06
E	CPCD20XX33
F	CPCD25XX33
G	CPCD30XX33
H	CPCD35XX33

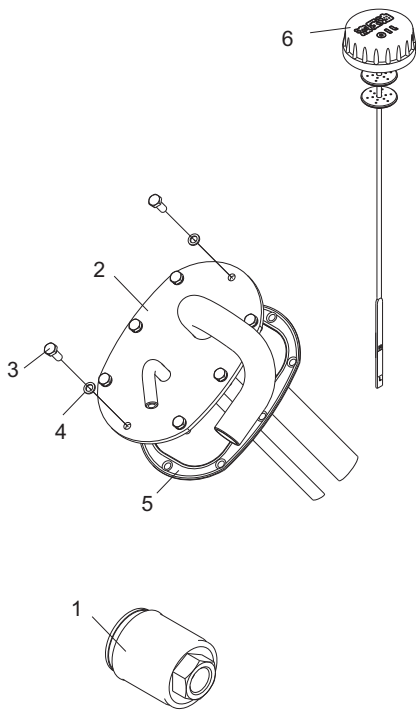

序号 Item No	编码 Code	图号 Part No	零部件名称 Description		数量 Q'ty	备注 Remark
1	30012015102	LG0060DT.12.11.04	滤油器总成	Oil filter assembly	1	
2	60700012847	CPYD30XH06.12.01.01	液压油箱盖板焊合	Cover plate weldment	1	ABCD
	60800008667	CPCD30XX33.12.01.01	液压油箱盖板焊合	Cover plate weldment	1	EFGH
3	51204091014	GB/T5783	螺栓M8×20	Bolt M8×20	8	
4	56147012401	JB/T982	组合垫圈8	Combination washer 8	8	
5	60300003749	LG0035DTN.12.17.02	油尺总成	Oil dipstick assembly	1	
6	60700002810	LG0035DTN.01.04-002	密封垫	Seal gasket	1	

图45/FIG.45

油冷却管路总成/ Oil cooling pipe assembly

E CPCD20XX33
F CPCD25XX33
G CPCD30XX33
H CPCD35XX33

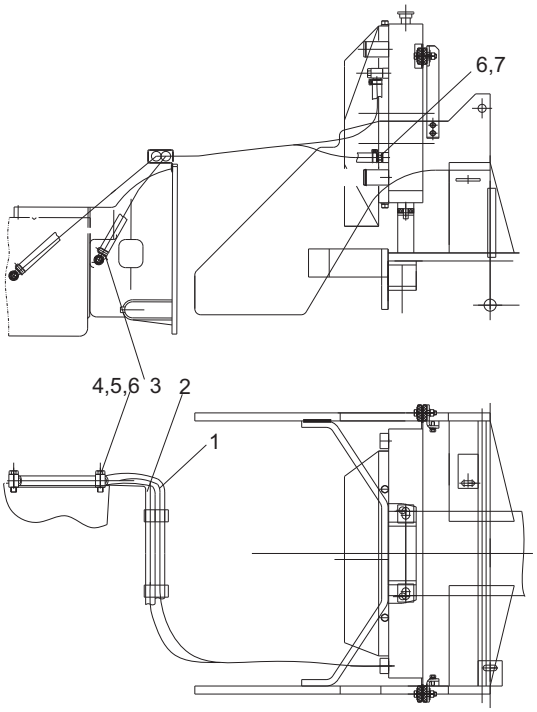

序号 Item No	编码 Code	图号 Part No	零部件名称 Description	数量 Q'ty	备注 Remark
1	30001109234	LG0030DT.01.01-002	胶管 Hose	1	
	30012187919	LG0030B.12-006	胶管Φ13×4-L=1100 Hose	1	
2	30001109235	LG0030DT.01.01-003	胶管 Hose	1	
	60911010883	20B-1202011	回油管 Oil return pipe	1	
3	56171002301	JB/T8870	喉箍d25(16~25) Hoop	4	
4	30001109400	LG0030DT.01.01-004	铰接螺栓 Hinged bolt	3	
5	30001109500	LG0030DT.01.01-005	铰接体 Hinged body	3	
6	56147010301	JB/T982	组合垫圈14 Combination washer14	7	
7	17601000555	LG0030DT.01.01-006	过渡接头 Transition connector	1	

图46/FIG.46 护顶架/Overhead guard

A	CPYD20XH06
B	CPYD25XH06
C	CPYD30XH06
D	CPYD35XH06
E	CPCD20XX33
F	CPCD25XX33
G	CPCD30XX33
H	CPCD35XX33

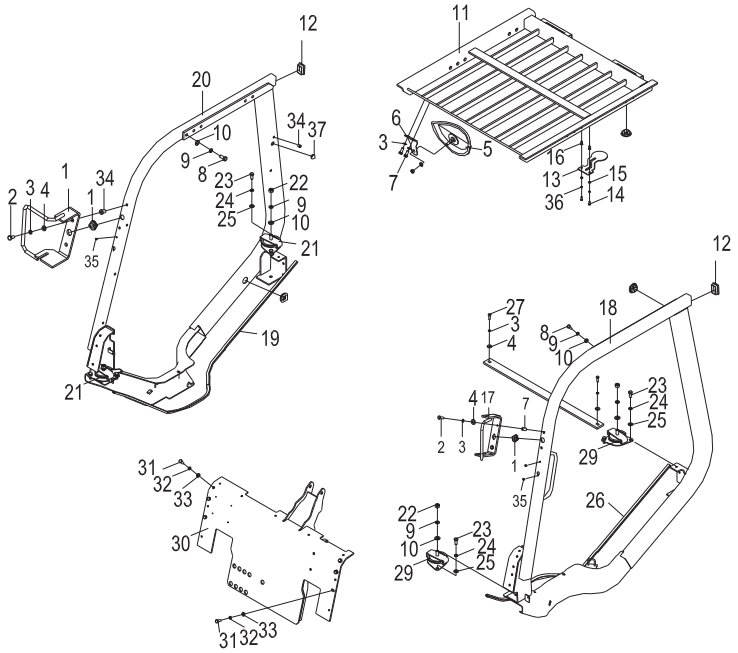

序号 Item No	编码 Code	图号 Part No	零部件名称 Description		数量 Q'ty	备注 Remark
1	30014018169	LG0025BⅥ.14.02	支架焊合	Bracket weldment	1	
2	51204091014	GB/T5783	螺栓M8×20	Bolt M8×20	4	
3	51401090107	GB/T93	垫圈8	Washer 8	8	
4	51421090115	GB/T97.1	垫圈8	Washer 8	8	
5	60700003380	LG0025BⅥ.14-009	后视镜总成	Rear view mirror assy.	1	
6	30014114919	LG0025BⅥ.14-003	支架	Bracket	1	
7	51204090914	GB/T5783	螺栓M8×16	Bolt M8×16	2	
8	51204121214	GB/T5783	螺栓M14×30	Bolt M14×30	10	
9	51401120107	GB/T93	垫圈14	Washer 14	14	
10	51421120115	GB/T97.1	垫圈14	Washer 14	14	
11	30014056182	CPYD30XH06.14.02	顶架焊合	Top rack weldment	1	
12	60700010224	30DⅢ-0900011	护罩	Hood sheath	2	
13	30015115018	LG0050DTⅢ.15-001	支架	Bracket	1	
14	51204080914	GB/T5783	螺栓M6×16	Bolt M6×16	2	
15	51401080107	GB/T93	垫圈6	Washer 6	2	
16	51421080115	GB/T97.1	垫圈6	Washer 6	2	

图46/FIG.46 护顶架/Overhead guard

A	CPYD20XH06
B	CPYD25XH06
C	CPYD30XH06
D	CPYD35XH06
E	CPCD20XX33
F	CPCD25XX33
G	CPCD30XX33
H	CPCD35XX33

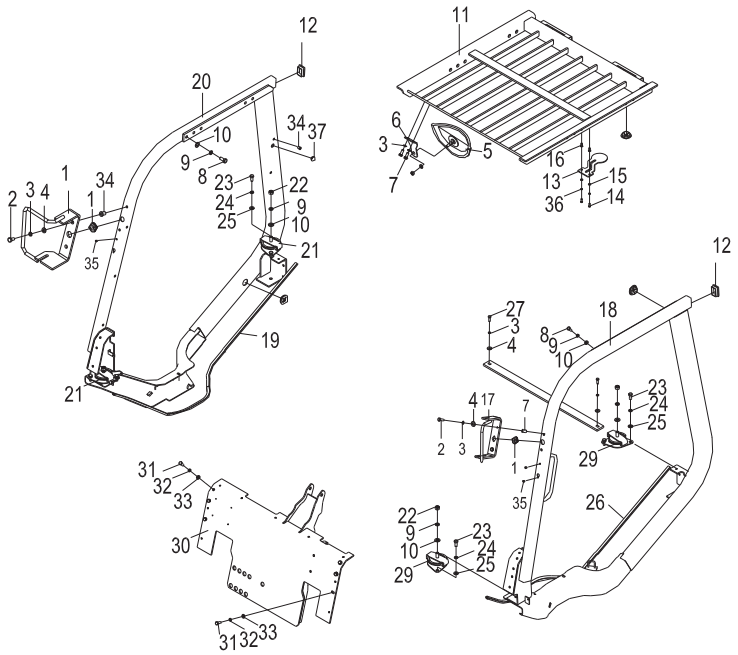

序号 Item No	编码 Code	图号 Part No	零部件名称 Description		数量 Q'ty	备注 Remark
17	30014018170	LG0025BⅥ.14.03	支架焊合	Bracekt weldment	1	
18	30014056707	CPYD30XH06.14.03	护架焊合	Guard cage weldment	1	
19	60900008504	LG0035DTN.14-007	密封条	Rubber ring	1	
20	30014056732	CPCD30XX33.14.01	护架焊合	Guard cage weldment	1	EFGH
	30014056708	CPYD30XH06.14.04	护架焊合	Guard cage weldment	1	ABCD
21	60700002218	LG0035DTN.14-002	右避震器总成	Right damper assy.	2	
22	51349000621	GB/T6185.2	螺母M14×1. 5	Nut M14×1.5	4	
23	51207115114	GB/T5786	螺栓M12×1. 25×25	Bolt M12×1.25×25	8	
24	51401110107	GB/T93	垫圈12	Washer 12	6	
25	51421110115	GB/T97.1	垫圈12	Washer 12	6	
26	60900008503	LG0035DTN.14-006	密封条	Seal stripe	1	
27	51204091114	GB/T5783	螺栓M8×25	Bolt M8×25	2	
28	30014116137	CPYD30XH06.14-001	横梁	Tranverse beam	1	
29	60700002217	LG0035DTN.14-001	左避震器总成	Left damper assy.	2	
30	30014058044	CPCD30XX33.14.02	仪表架焊合	nstrument carrier weldment	1	EFGH
	30014058038	CPYD30XH06.14.01	仪表架焊合	Instrument carrier weldment	1	ABCD

图46/FIG.46 护顶架/Overhead guard

A	CPYD20XH06
B	CPYD25XH06
C	CPYD30XH06
D	CPYD35XH06
E	CPCD20XX33
F	CPCD25XX33
G	CPCD30XX33
H	CPCD35XX33

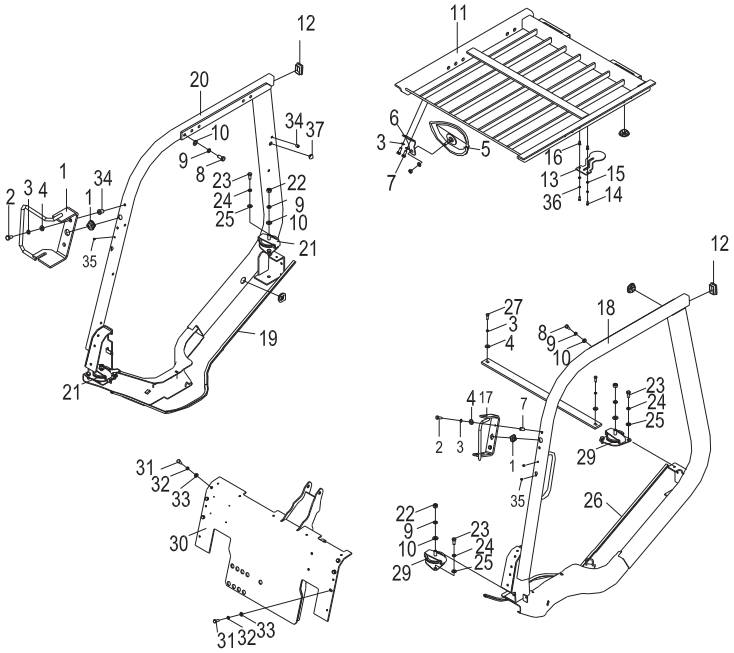

序号 Item No	编码 Code	图号 Part No	零部件名称 Description		数量 Q'ty	备注 Remark
31	51207105114	GB/T5786	螺栓M10×1. 25×25	Bolt M10×1.25×25	6	
32	51401100107	GB/T93	垫圈10	Washer 10	6	
33	51421100115	GB/T97.1	垫圈10	Washer 10	6	
34	60700000094	GB/T17880.1	铆螺母M8×18	Rivet nut M8×18	6	
35	60700008354	GB/T17880.1	铆螺母M4	Rivet nut M4	4	
36	60700000093	GB/T17880.1	铆螺母M6×16. 5	Rivet nut M6×16.5	2	
37	60700008259	LG0025BⅥ.14-011	橡胶垫	Rubber gasket	1	

图47/FIG.47 电气系统/Electric system

A CPYD20XH06
B CPYD25XH06
C CPYD30XH06
D CPYD35XH06

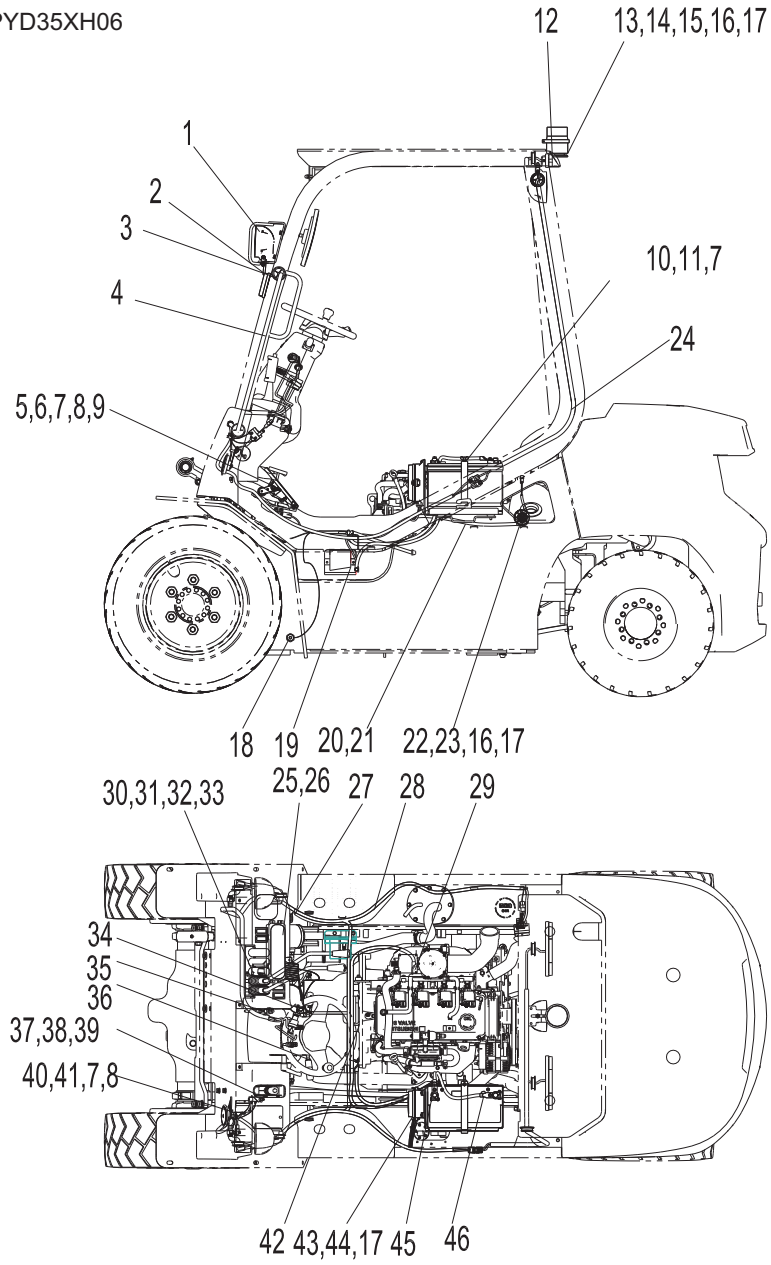

电气系统/Electric system

序号 Item No	编码 Code	图号 Part No	零部件名称 Description		数量 Q'ty	备注 Remark
1	60400010784	30DIII-1501500A	工作灯	Working lamp	2	
2	60400008671	30DIII-1501400A	前组合灯	Front combination lamp	2	
3	60400002555	LG0035DTN.15-001	过线圈	Rubber ring	5	
4	30015064508	LG0030DT.15.03	护顶架线束	Overhead guard harness	2	
5	60800000329	HC264	电子油门踏板	Electrical throttle pedal	1	
6	51204091114	GB/T5783	螺栓M8×25	Bolt M8×25	2	
7	51421090115	GB/T97.1	垫圈8	Washer 8	9	
8	51401090107	GB/T93	垫圈8	Washer 8	5	
9	51307000919	GB/T6170	螺母M8	Nut M8	2	
10	30015068047	CPC50LQ17.15.07	蓄电池盒总成	Battry box assy	1	
11	51204090914	GB/T5783	螺栓M8×16	Bolt M8×16	5	
12	60400010786	30DIII-1501700A	后组合灯	Rear combination lamp	2	
13	30015064403	LG0030B.15.19	警示灯	Warning lamp	1	
14	30015115018	LG0050DTIII.15-001	支架	Bracket	1	
15	51204080914	GB/T5783	螺栓M6×16	Bolt M6×16	2	
16	51401080107	GB/T93	垫圈6	Washer 6	3	
17	51421080115	GB/T97.1	垫圈6	Washer 6	7	
18	30015163702	LG0030DTIII.15-001	温度报警开关	Temprature alarm switch	1	
19	30015062332	LG0025GLTHGIII.15.05	电器元件总成	Electrical element assy.	1	
20	60980000547	30D-1500001	扎带4×300	Binding tape	20	
21	60980005598	LG0030DIII.15-003	扎带	Binding tape	40	
22	60402020101	LG0030D.15-007	倒车蜂鸣器	Backup buzzer	1	
23	51204080814	GB/T5783	螺栓M6×12	Bolt M6×12	1	
24	60400015250	CPYD30XH06.15.03	灯具线束	Lamp harness	1	
25	60400015038	CPCD35NR22Y4.15.07	指针仪表（英文）	Pointer instrument(English)	1	
26	51158140504	GB/T818	螺钉M4×12	Screw M4×12	4	
27	60400002321	30DIII-1513000A	USB充电器	USB charger	1	
28	60400017608	CPYD30XH06.15.06	线束总成	Harness assy.	1	
29	30015068302	LG0030DIII.15.09	易熔线	Fuse wire	1	
30	60400017759	LG0030D5.15.53	连接线束	Connecting harness	1	
31	60400017760	LG0030D5.15.54	连接线束	Connecting harness	1	
32	60400017761	LG0030D5.15.55	连接线束	Connecting harness	1	
33	60400017762	LG0030D5.15.56	连接线束	Connecting harness	1	
34	60400002575	LG0035DTN.15.05	钥匙开关	Key switch	1	
35	60400012406	30DIII-1517000A	刹车灯开关	Brake lamp switch	1	
36	60400002579	LG0035DTN.15.06	组合开关	Combination switch	1	

电气系统/Electric system

序号 Item No	编码 Code	图号 Part No	零部件名称 Description		数量 Q'ty	备注 Remark
37	60400002571	LG0035DTN.15.24	微动开关	Inching switch	1	
38	51158140904	GB/T818	螺钉M4×25	Screw M4×25	2	
39	30015115072	LG0035DTN.15-003	支架	Bracket	1	
40	60401050007	LG0030D.15-004	喇叭	Horn	1	
41	60400001070	LG0030DTXBIII.15CE.04	蜂鸣器	Buzzer	1	
42	30015115173	CPYD306H06.15-001	支架	Bracket	1	
43	60400017606	CPYD30LHY01.15.03.02	控制盒	Control box	1	
44	51158190304	GB/T818	螺钉M6×12	Screw M6×12	4	
45	60400015249	CPYD30XH06.15.02	连接电缆	Connecting cable	1	
46	30015061513	LG0025GLTHGIII.15.02.0	地线电缆	Ground cable	1	

图48/FIG.48 电气系统/Electric system

E CPCD20XX33
F CPCD25XX33
G CPCD30XX33
H CPCD35XX33

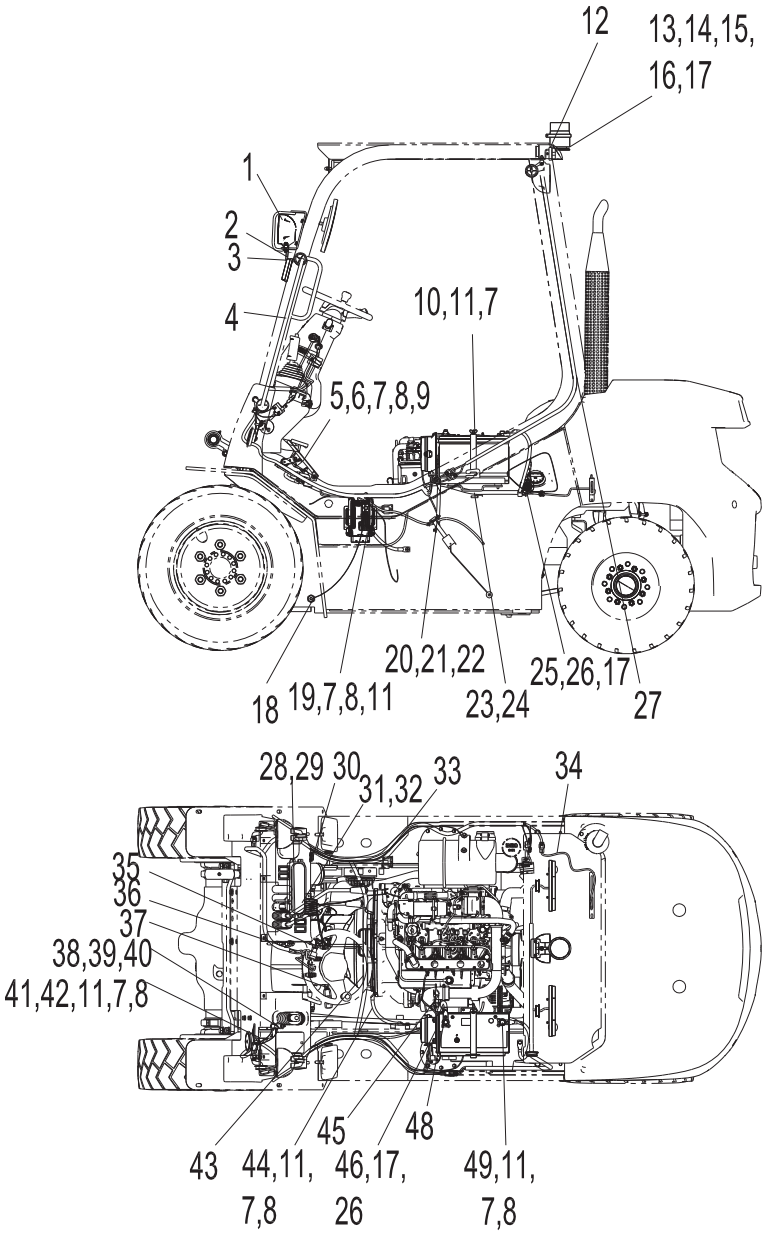

电气系统/Electric system

序号 Item No	编码 Code	图号 Part No	零部件名称 Description		数量 Q'ty	备注 Remark
1	60400010784	30DIII-1501500A	工作灯	Working lamp	2	
2	60400008671	30DIII-1501400A	前组合灯	Front combination lamp	2	
3	60400002555	LG0035DTN.15-001	过线圈	Rubber ring	5	
4	30015064508	LG0030DT.15.03	护顶架线束	Overhead guard harness	2	
5	60800000329	HC264	电子油门踏板	Electrical throttle pedal	1	
6	51204091114	GB/T5783	螺栓M8×25	Bolt M8×25	2	
7	51421090115	GB/T97.1	垫圈8	Washer 8	13	
8	51401090107	GB/T93	垫圈8	Washer 8	9	
9	51307000919	GB/T6170	螺母M8	Nut M8	2	
10	30015068047	CPC50LQ17.15.07	蓄电池盒总成	Battry box assy	1	
11	51204090914	GB/T5783	螺栓M8×16	Bolt M8×16	9	
12	60400010786	30DIII-1501700A	后组合灯	Rear combination lamp	2	
13	30015064403	LG0030B.15.19	警示灯	Warning lamp	1	
14	30015115018	LG0050DTIII.15-001	支架	Bracket	1	
15	51204080914	GB/T5783	螺栓M6×16	Bolt M6×16	2	
16	51401080107	GB/T93	垫圈6	Washer 6	2	
17	51421080115	GB/T97.1	垫圈6	Washer 6	7	
18	30015163702	LG0030DTIII.15-001	温度报警开关	Temperature alarm switch	1	
19	30015062425	CPCD30XX33.15.03	电器元件总成	Electrical element assy.	1	
20	60400002578	LG0035DTN.15.22	油量传感器	Oil capacity sensor	1	
21	51158170404	GB/T818	螺钉M5×12	Screw M5×12	5	
22	56147000101	JB/T982	组合垫圈5	Combination washer 5	5	
23	60980000547	30D-1500001	扎带4×300	Binding tape	20	
24	60980005598	LG0030DIII.15-003	扎带	Binding tape	40	
25	60402020101	LG0030D.15-007	倒车蜂鸣器	Backup buzzer	1	
26	51158190304	GB/T818	螺钉M6×12	Backup buzzer	5	
27	60400015250	CPYD30XH06.15.03	灯具线束	Lamp harness	1	
28	60400008911	LG0050DTBQAIII.15.04	翘板开关	Panel switch	1	
29	60400011804	CPCD100LQ19.15.04	翘板开关	Panel switch	1	
30	60400002321	30DIII-1513000A	USB充电器	USB charger	1	
31	60400017691	CPCD30XX33.15.02	指针仪表	POinter instrument	1	
32	51158140504	GB/T818	螺钉M4×12	Screw M4×12	4	
33	60400017690	CPCD30XX33.15.01	线束总成	Harness assy.	1	
34	60400011603	CPCD30LX20.15.05	连接线束	Connecting harness	1	
35	60400002575	LG0035DTN.15.05	钥匙开关	Key switch	1	
36	60400012406	30DIII-1517000A	刹车灯开关	Brake lamp switch	1	

电气系统/Electric system

序号 Item No	编码 Code	图号 Part No	零部件名称 Description		数量 Q'ty	备注 Remark
37	60400002579	LG0035DTN.15.06	组合开关	Combination switch	1	
38	60400002571	LG0035DTN.15.24	微动开关	Inching switch	1	
39	51158140904	GB/T818	螺钉M4×25	Screw M4×25	2	
40	30015115072	LG0035DTN.15-003	支架	Bracket	1	
41	60401050007	LG0030D.15-004	喇叭	Horn	1	
42	60400001070	LG0030DTXBIII.15CE.04	蜂鸣器	Buzzer	1	
43	30015115173	CPYD306H06.15-001	支架	Bracket	1	
44	30015061510	LG0075DTG.15.15	地线电缆	Ground cable	1	
45	30015068302	LG0030DIII.15.09	易熔线	Fuse wire	1	
46	60400011601	CPCD30LX20.15.03.01	控制盒	Control box	1	
48	60400014373	CPC50LQ17.15.09	连接电缆	Connecting cable	1	
49	30015061512	LG0050DTⅣ.15.01.10	地线电缆	Ground cable	1	

图49/FIG.49

电气元件总成/ Electrical component assy.

A	CPYD20XH06
B	CPYD25XH06
C	CPYD30XH06
D	CPYD35XH06
E	CPCD20XX33
F	CPCD25XX33
G	CPCD30XX33
H	CPCD35XX33

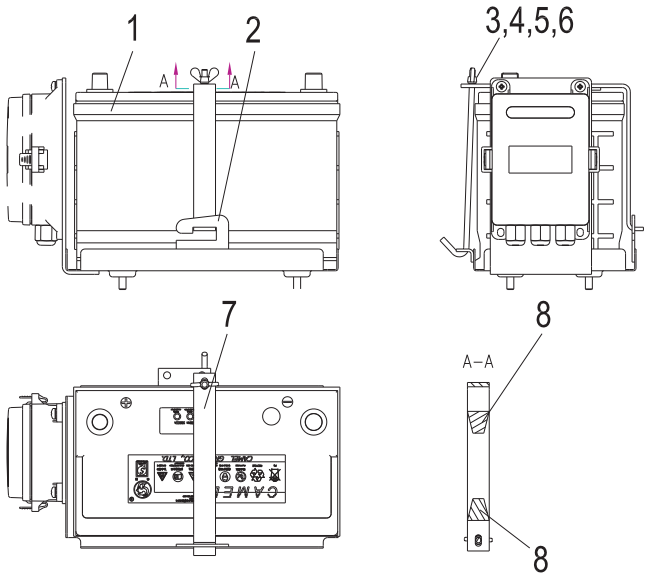

序号 Item No	编码 Code	图号 Part No	零部件名称 Description	数量 Q'ty	备注 Remark
1	60401030028	LG0030D.15.05.01	蓄电池 Battery	1	
2	30015062110	30DⅢ-1503210A	电瓶支架焊合 Battery bracket weldment	1	
3	51421080115	GB/T97.1	垫圈6 Washer 6	1	
4	51354000404	GB/T62.1	螺母M6 Nut M6	1	
5	51401080107	GB/T93	垫圈6 Washer 6	1	
6	30015150205	LG0035DTN.15.20-001	固定杆 Fixed rod	1	
7	30015115071	LG0035DTN.15.20-002	支架 Bracket	1	
8	30015162503	LG0050DTⅣ.15.01.06-002	橡胶块 Rubber block	2	

图50/FIG.50 标牌/Label

A CPYD20XH06
B CPYD25XH06
C CPYD30XH06
D CPYD35XH06
E CPCD20XX33
F CPCD25XX33
G CPCD30XX33
H CPCD35XX33

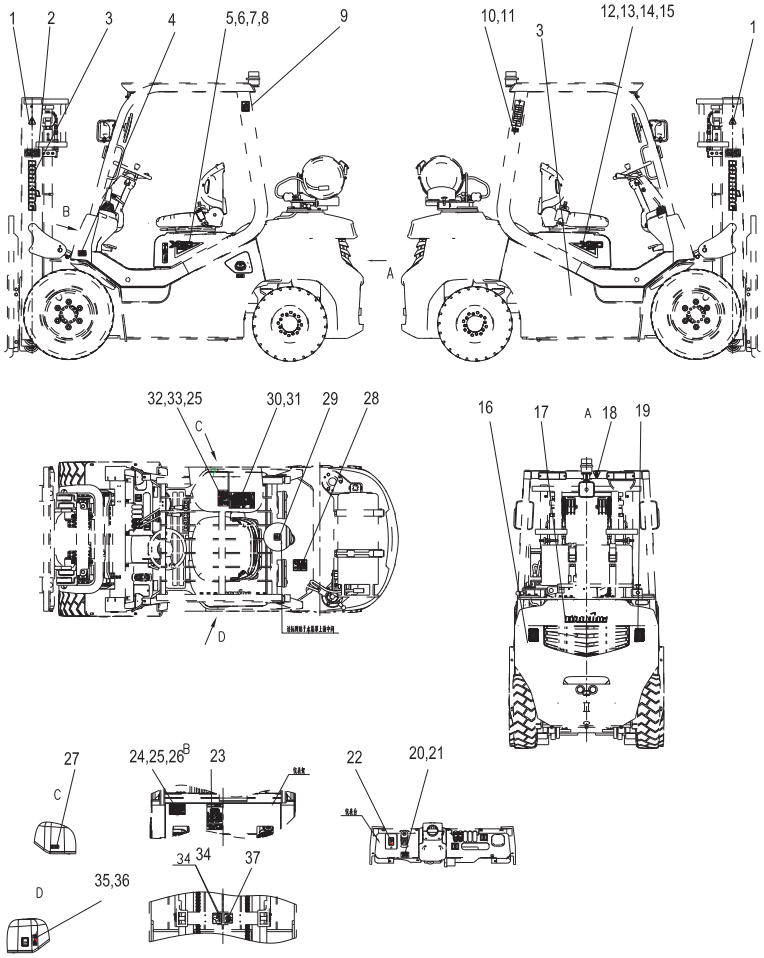

标牌/Label

序号 Item No	编码 Code	图号 Part No	零部件名称 Description		数量 Q'ty	备注 Remark
1	30016197803	LG0030DⅢ.16-003	起吊点标牌	Hoist point label	4	
2	30016197312	LG0030D.16-001	警示标牌货叉上下禁止停留	No stay on/under the fork	2	
3	68000009579	LG0035D5.16-008	龙工标志（英文）	Lonking label	4	
4	68000000645	LG0035DTN.16-005	轮胎气压标牌	Tire pressure label	1	
5	68000009552	CPYD30XH06.16-004	型号标牌	Model label	1	
6	68000009554	CPYD35XH06.16-001	型号标贴	Model label	1	选配/3.5t
7	68000009880	CPYD25XH06.16-001	型号标贴	Model label	1	选配/3.5t
8	68000009882	CPYD20XH06.16-001	型号标贴	Model label	1	2.5t
9	30016197101	LG0030D.16-005	叉车吊运标牌	Hoist label	1	2t
10	30016197314	LG0030D.16-018	警示标牌严禁冲水	No flush	1	
11	30016197317	LG0030D.25-006	警示标牌严禁冲水	No flush	1	国内用
12	68000009553	CPYD30XH06.16-005	型号标贴	Model label	1	国外用
13	68000009555	CPYD35XH06.16-002	型号标贴	Model label	1	选配/3.5t
14	68000009881	CPYD25XH06.16-002	型号标贴	Model label	1	选配/3t
15	68000009883	CPYD20XH06.16-002	型号标贴	Model label	1	2.5t
16	68000009582	LG0035D5.16-011	反光贴(左)	Glisten sticker(L)	1	2t
17	60700012852	CPYD30XH06.16-002	龙工标志	Lonking label	1	
18	30016197315	LG0030D.16-019	警示标牌禁止起吊	Do not Hoist	1	
19	68000009583	LG0035D5.16-012	反光贴(右)	Glisten sticker(R)	1	
20	30016197009	LG0075DTG.16-017	操纵说明标牌停车制动调整	Parking brake adjustment	1	内销车用
21	60900002318	LG0075DTG.16-026	操纵说明标牌停车制动调整	Parking brake adjustment	1	出口车用
22	68000000646	LG0035DTN.16-006	制动液标牌	Brake fluid label	1	
23	30016197905	LG0075DTG.16-009	润滑点标牌	Lubricating point label	1	
24	60700008719	LG0050DTⅢ.16-020	铭牌	Nameplate	1	
25	51569000106	GB/T12618.1	抽芯铆钉4×12	Mandrel blinded rivet 4×12	12	
26	30016197709	LG0075DTG.16-015	铭牌	Nameplate	1	国内用
27	30016198511	LG0075DTG.16-010	油品标牌	Oil label	1	
28	80380801888	LG0030D.16-033	防冻液标签-35℃	Antifreeze fluid -35℃	1	
29	30016197318	LG0030DⅢ.16-012	警示标牌风扇伤手	Do not hurt the hand	1	
30	30016197908	LG0075DTG.16-013	说明标牌使用须知	Instruction label	1	内销车用
31	60900002321	LG0075DTG.16-029	说明标牌使用须知	Instruction label	1	出口车用
32	60700000838	LG0050DTⅣ.16-009	载荷曲线标牌	Load curve chart label	1	国内用
33	68000000266	LG0050DTⅣ.16-010	载荷曲线牌	Load curve chart label	1	国外用
34	30016197319	LG0030DⅢ.16-013	警示标牌勿伤手	Do not hurt the hand	2	
35	30016197907	LG0075DTG.16-021	说明标牌气弹簧安全锁	Air spring safety lock	1	国内用
36	60700002852	LG0075DTG.16-039	说明标牌气弹簧安全锁	Air spring safety lock	1	国外用

标牌/Label

序号 Item No	编　码 Code	图　号 Part No	零部件名称 Description	数量 Q'ty	备　注 Remark
37	30016197301	20B-1600002	警示标牌门架后侧禁入 Do not enter from back of mast	1	

图51/FIG.51 平衡重/Counter weight

A CPYD20XH06
B CPYD25XH06
C CPYD30XH06
D CPYD35XH06
E CPCD20XX33
F CPCD25XX33
G CPCD30XX33
H CPCD35XX33

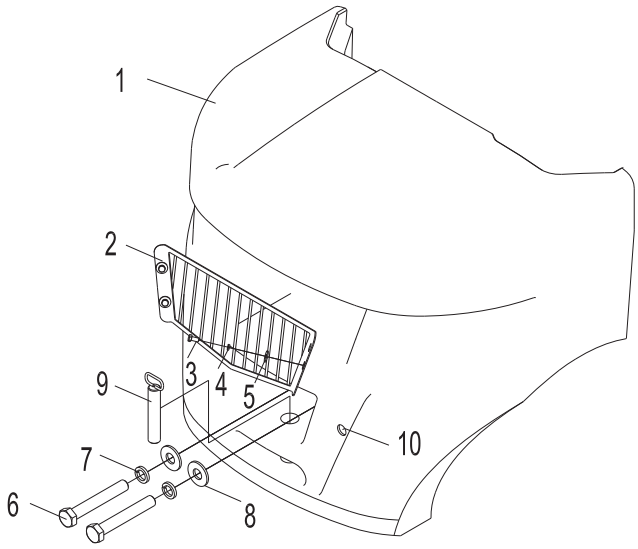

序号 Item No	编码 Code	图号 Part No	零部件名称 Description		数量 Q'ty	备注 Remark
1	60600010832	CPYD25XH06.17-001F	平衡重	Counter weight	1	2-2.5t
	60700012854	CPYD30XH06.17-001F	平衡重	Counter weight	1	3t
	60600010451	CPYD35XH06.17-001F	平衡重	Counter weight	1	3.5t
2	30017018301	CPCD35NR20Y4.17.03	保护罩焊合	Guard hood weldment	1	
3	51204091114	GB/T5783	螺栓M8×25	Bolt M8×25	4	
4	51401090107	GB/T93	垫圈8	Washer 8	4	选配
5	51421090115	GB/T97.1	垫圈8	Washer 8	4	
6	51203193314	GB/T5782	螺栓M30×200	Bolt M30×200	2	
7	51401200107	GB/T93	垫圈30	Washer 30	2	
8	30017106400	LG0030D.17-003	垫圈	Washer	2	
9	30017038502	30D-1701000	牵引销焊合	Traction pin weldment	1	
10	60700010489	LG0135DT5.08-002	雷达孔塞	Rador orifice	3	2-2.5t
	60700013186	CPYD30XH06.17-002	雷达孔塞	Radar orifice	3	3-3.5t

图52/FIG.52 液化石油气装置总成/ LPG device assy.

A CPYD20XH06
B CPYD25XH06
C CPYD30XH06
D CPYD35XH06

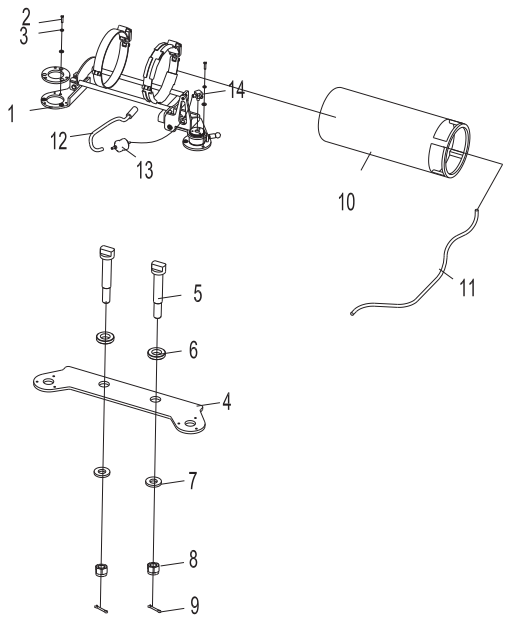

序号 Item No	编码 Code	图号 Part No	零部件名称 Description		数量 Q'ty	备注 Remark
1	30001018501	LG0035GLTNDⅢ.19.01.01	支架总成	Bracket	1	
2	51204111214	GB/T5783	螺栓M12×30	Bolt	6	
3	51401110107	GB/T93	垫圈12	Washer	12	
4	30001105355	CPYD30XH06.19-001	安装板	Mounting plate	1	
5	60700012904	CPYD30XH06.19-002	螺杆	Screw stud	2	
6	60700000619	LG0100DTKDⅢ.17-005	减震垫	Rubber gasket	2	
7	60700000620	LG0100DTKDⅢ.17-006	垫圈	Washer	2	
8	51309001820	GB/T6171	螺母M42×3	Nut	2	
9	51512122001	GB/T91	销8×63	Pin	2	
10	30001013601	LG0030GLT.19.03.02	钢瓶总成	Steel cylinder	1	
11	60700013093	CPYD35LH06.19.02	LPG软管1000mm	LPG hose	1	
12	60700013092	CPYD35LH06.19.01	LPG软管800mm	LPG hose	1	
13	60700013095	CPYD35LH06.19.04	LP过滤器	LPG filter	1	
14	60700013094	CPYD35LH06.19.03	三通接头	T-connector	1	